Trachte Erection Guide

Variable Roof Pitch Self-Storage System

For Roof Pitches 1/4":12" to 1/2":12"

TRACHTE
A TBS COMPANY

608-837-7899 • trachte.com • info@trachte.com

TABLE OF CONTENTS

Pre-Erection Procedures	Page Number
Safety considerations	2
1. General information Part numbering system	3
2. Stacking shipments	4
3. Unloading the shipment	4
4. Shipment inspection	4
5. Material storage	6
6. Preparation	6
7. Recommended tools	8
8. Fasteners	9
9. Laying out the building	9
Fastener Descriptions	11
10. Understanding your specific plans	12
11. Typical building components	13
12. Typical roof, wall & trim components	14
13. Fastening details	15

Erecting a Trachte™ 1/4":12" or 1/2":12" Pitch Self-Storage Building

Steps 1 - 30 Lay out the interior structure and assemble the first interior bay	16
Steps 31 - 51 Install door jambs & headers on a sidewall	26
Steps 52 - 69 Install 5' x 10' endwall closets	33
Steps 70 - 77 Install 10' x 10' endwall closets	39
Steps 78 - 86 Install the structure for blank side wall or endwall *(if applicable)*	42
Steps 87 - 98 Install the transverse partition walls (width of the building)	44
Steps 99 - 106 Install the longitudinal secondary partition walls (length of the building)	48
Steps 107 - 119 Install the A-panel sidewall or endwall	51
Steps 120 - 126 Install the eave trim	55
Steps 127 - 140 Install a standing seam roof	58
Steps 141 - 172 Install a R-panel roof	63
Steps 169 - 178 Install the rake trim and peak box	72
Steps 179 - 194 Install gutters and downspouts *(if applicable)*	76
Steps 195 - 202 Install a step in the roof *(if applicable)*	82
Door Installation Manual	85

Proprietary Notice

Information contained in this document is copyrighted by Trachte Building Systems and may not be duplicated in full or part by any person without prior written approval of Trachte Building Systems Its purpose is to provide the user with adequate detailed documentation to efficiently erect a Trachte Variable Roof Pitch Self-Storage System. Every effort has been made to keep the information current and accurate. However, no guarantee is given or implied that the document is error free or that it is accurate with regard to any specification.

Service Support

For assistance before and after building erection, or have questions regarding building materials please contact Trachte Customer Service at **800-356-5824.**

Contact Trachte Field Services at **800-356-5824** if there are questions in the erecting process.

608.837.7899

SAFETY CONSIDERATIONS

BASIC PERSONAL SITE SAFETY

It is the responsibility of every worker to guard their own safety and that of their co-workers. This responsibility can be achieved by practicing basic personal site safety by following start-up, operational, and shut-down precautions.

MAKING SAFETY A PRIORITY

Making safety a priority is the key ingredient to basic personal site safety. Being careless on the job site is the first step towards injury. Each crew member must regularly assess their own knowledge and ability, and if necessary, ask for help. No one should ever operate equipment that he/she is not familiar with.

All needless distractions should be avoided. Top priority must be given to concentrating on the work at hand, and watching out for potential hazards. Workers should constantly strive to reduce job site hazards. A worker should never modify or alter safeguarding devices.

INSPECTING THE ENVIRONMENT

Building materials should be neatly stacked and easily accessible. The worker should ensure that there is sufficient space to work and assemble the product at a convenient location. The few minutes it takes at the start of a day to plan out activities and ensure that the work area is clean and uncluttered, can go a long way toward improving safety and increasing productivity.

INSPECTING THE TOOLS AND EQUIPMENT

The job site inspection must also include a thorough evaluation of all tools and equipment that will be utilized during the job. Machinery should be examined for any indication of worn or broken parts. This inspection should include hand tools.

Safety devices must also be checked. If a worker notices any sign of equipment defect, the tool or equipment must be taken out of service and repaired.

ERGONOMIC

Since many job site injuries come from muscle related injuries, it is essential that all workers practice good body mechanics. The basic principle of effective body mechanics, or ergonomics, is to utilize the body most effectively within its limitations. For example, when bending or lifting, it is most effective to use the large muscles of the legs rather than the smaller, weaker muscles of the back.

The back is particularly at risk for injury, and therefore, extra caution must be given to proper lifting and bending. Prior to any lifting, workers must assess the weight of the object and if it is too heavy, secure extra help. Because muscle injuries can become quite painful and debilitating, it is advisable that all workers learn and practice good body mechanics.

DRESS SAFELY

When on the job, workers must be careful to dress with safety in mind. Loose or frayed clothing may become caught in the machinery or on materials, placing the worker at risk for injury. Likewise, jewelry such as metal watch straps, rings, necklaces, and bracelets can become a hazard. Long flowing hair or beards present a similar danger. To prevent becoming tangled in moving tools or parts, workers must dress properly and practice good grooming.

SUMMARY

Job site safety is everyone's responsibility. It starts with a thorough knowledge of safety standards and safety procedures. It includes competency with machine tools and related equipment. It's an on-going process, made progressively better with new advances in equipment design, controls, and education.

You may wish to consult with safety professionals in the industry, or with safety equipment suppliers. Or contact OSHA (Occupational Safety & Health Administration) or the U.S. Department of Labor for regulations, standards or help with learning more about safety.

WARNINGS, CAUTIONS, AND NOTES IN MANUAL

A ***warning*** tells you about something that could harm you or another person.

A ***caution*** tells you about something that could damage the building.

A ***note*** tells you other important information.

www.trachte.com

1. GENERAL INFORMATION

1.1 The erection guide is used in combination with your building plans for the installation of your Trachte 1/4”:12” or 1/2”:12” self-storage building.

1.1.1 Please make sure that the persons who will be responsible for erecting the building read this entire guide and building plans carefully and completely before starting the building erection.

1.2 If you have any questions, or do not fully understand any part of the instructions in this guide, please do not hesitate to contact Trachte Building Systems at **800-356-5824**. Asking questions before starting will save time and eliminate mistakes. It is important to us at Trachte Building Systems, that you fully understand all the information necessary to successfully erect your building before actually starting the installation.

1.3 This guide describes the erection of a **typical** Trachte 1/4”:12” or 1/2”:12” pitch building and as such may **NOT** include procedures which apply to the building you ordered.

1.3.1 Trachte prepares erection drawings specifically for the building(s) you receive which contain dimensions, details, descriptions and installation details of accessories and optional items ordered from Trachte. These plans and details, along with the description and illustration in this guide, provide you with complete instructions necessary to efficiently and successfully erect your particular Trachte building.

1.4 Part number references. In the bottom left hand corner of the cover page of your plans there is a detailed explanation of how the part numbering system works. An example is listed below. Please become familiar with the system before beginning installation.

1.5 Some parts look alike, varying only in length, material thickness, or hole punchings. Part numbers may be similar, so carefully read the whole part number.

608.837.7899

Part Numbering

10-DIGIT PART NUMBER

5000	5000	00
COMPONENT	NUMBER	COLOR GAUGE

2-DIGIT CODE
IDENTIFIES MATERIAL COLOR OR GAUGE
STRUCTURAL PARTS USE GAUGE CODE
NON-STRUCTURAL PARTS USE COLOR CODE

4-DIGIT RANDOM NUMBER
RANGE FROM 0000 TO 9999
MOST COMPONENTS WILL FOLLOW A LOGICAL SEQUENCE
BASED ON HOW OR WHERE THEY ARE USED ON A BUILDING

4-DIGIT COMPONENT CODE
THIS IDENTIFIES A CLASS OF PARTS
SUCH AS COLUMNS, HEADERS, BASEPLATES ETC.

9-DIGIT NUMBER

33		
COMPONENT	FINISH	LENGTH

Imaginary Decimal Point

5-DIGIT LENGTH
FIRST 3-DIGITS = INCHES
LAST 2-DIGITS ARE DECIMAL (FRACTION)
ALWAYS IMAGINE A DECIMAL POINT BEFORE LAST 2-DIGITS

2-DIGIT CODE
IDENTIFIES MATERIAL COLOR OR GAUGE
STRUCTURAL PARTS USE GAUGE CODE
NON-STRUCTURAL PARTS USE COLOR CODE

2-DIGIT PROFILE CODE
THIS IDENTIFIES A STANDARD PROFILE
SUCH AS PANELS, TRIMS, STUDS, ETC.

2-DIGIT GAUGE CODES
12 = 12-GAUGE
14 = 14-GAUGE
16 = 16-GAUGE
18 = 18-GAUGE

2-DIGIT COLOR CODES
80 = Galvanized
82 = Galvalume

2-DIGIT WALL & TRIM COLOR CODES
60 = Cream Beige
61 = Slate Gray
62 = Classic Beige
63 = Iced White
27 = Light Stone

2-DIGIT DOOR or TRIM COLOR CODES
21 = Ash Gray
26 = Matte Black
31 = Patriot Red
40 = Sunset Orange
41 = Desert Tan
42 = Polar Blue
43 = Royal Blue
32 = Lime Green (Door only)

2-DIGIT DOOR or TRIM COLOR CODES
44 = Contl. Brown
45 = Garnet
46 = Evergreen
47 = Cedar Red
48 = Shale
63 = Iced White
64 = Bright White (Door)

2-DIGIT S.S. Roof COLOR CODES
10 = Regal White
11 = Roman Blue
12 = Evergreen
13 = Patrician Bronze
14 = Surrey Beige
23 = Regal/Harbor Blue
24 = Colonial Red
26 = Matte Black
82 = Galvalume

2-DIGIT Special COLOR CODES
28 = Clay
33 = Polar White
37 = Sand Stone
38 = VP Charcoal Black
39 = VP Patrician Bronze
49 = Natural Stone
65 = Yellow
66 = Silver Metallic
67 = Birch White

6-DIGIT PART NUMBERS ARE ALSO USED. THESE FOLLOW NO SPECIFIC STRUCTURE. THEY ARE COMMONLY USED FOR FASTENERS, SWING DOORS, PEAK BOXES, AND SOME OTHER PARTS.

Most of Trachte’s standard color codes are shown. Special colors are not shown. Permit plans may not show the correct color of your desired building. The final erection set of drawings may show the correct colors ordered. The colors may not always be shown within the drawing set but the material listing will always show the correct color for the part listed.

2. STACKING SHIPMENTS

2.1 To simplify and expedite erection of your Trachte building, separate each group of materials and components by part number and size as they are unloaded.

2.1.1 Fig. 1 shows a recommended stacking arrangement of components and materials.

3. UNLOADING THE SHIPMENT

3.1 Unless notified otherwise, your Trachte building will arrive at the site on one or more flat bed semi-trailer trucks.

3.2 If streets and/or parking in the vicinity where the truck(s) will be unloaded are narrow, congested, or otherwise restricted, it is recommended that you arrange IN ADVANCE with local traffic authorities for any special parking requirements, permits, barricades, or traffic-control personnel which may be necessary.

3.3 In addition to arranging for adequate truck parking, it is highly recommended that you have an adequate number of personnel and material handling equipment at the site when the truck(s) arrive(s) to unload and stack each group of materials and components in an orderly manner which will not cause damage to either the materials or finished surfaces.

3.4 Materials and components will be packaged and/or strapped together for shipment. Some materials may be on wood pallets or in corrugated cardboard containers. **NOTE: Trim box may be stacked between bundles, please use caution when unloading.**

3.5 The maximum load of any pallet is 5,000 lbs. A heavy duty forklift capable of lifting 5,000 lbs and has a minimum 5' spread for forks is recommended for unloading.

3.6 If your building has roof or partition panels over 25' long, **two forklifts** or spreader bars are recommended to disperse the load evenly which are required for unloading.

4. SHIPMENT INSPECTION

4.1 When the building package arrives, it will be accompanied by a bill of lading and picking tickets (packing list). Immediately inspect the shipment for missing items or damage to components and/or hardware using the picking ticket to verify completeness of the shipment. Each piece is separately marked and all parts should be counted. *Refer to the Trac Rite Door Manual for inspecting the door manual components.*

4.2 Note any damaged items or components on the shipper's bill of lading BEFORE the truck(s) leave(s) the site. **You have 48 hours to notify Trachte of any missing or damaged items.**

4.3 If moisture is evident as the truck(s) are unloading, write: "MOISTURE FOUND ON SHIPMENT," or similar words, on the shipper's bill of lading BEFORE the truck(s) leave(s) the site.

4.4 Promptly report damaged or missing components or hardware, or presence of moisture to Trachte customer service. Please have your copy of the picking ticket and the bill of lading available BEFORE contacting customer service at **800-356-5824.**

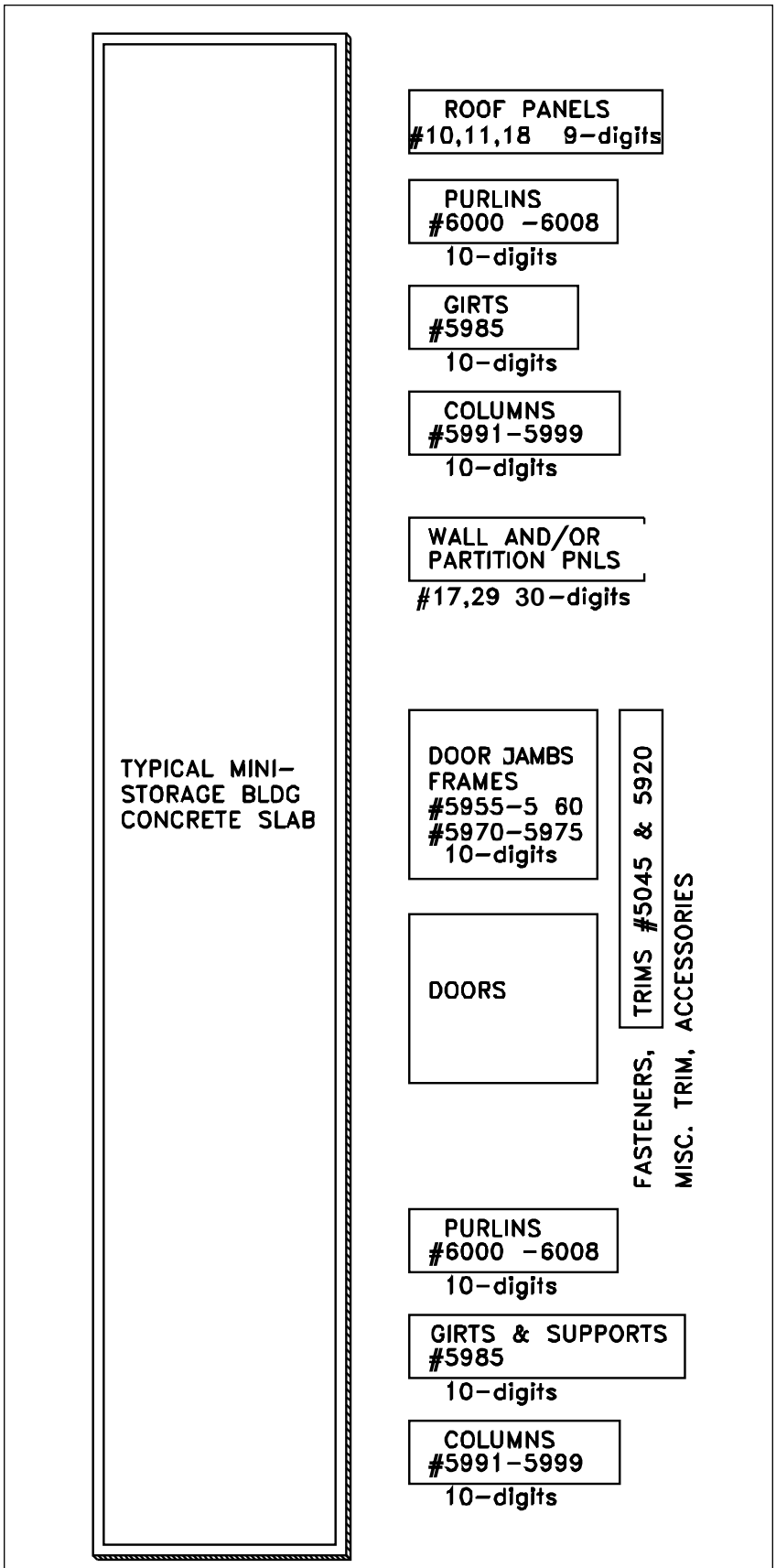

NOTE: Some parts will be placed in purlin bundles to condense load.

Fig. 1 - Stacking Shipment(s)

608.837.7899

5. MATERIAL STORAGE

5.1 Trachte Building Systems, Inc. furnishes materials for your building with either a zinc coated or factory-painted finish. While being stored on the site, galvanized materials may be subjected to staining (commonly known as "white rust"). The galvalume material (wall partition) may be subjected to staining also. (This is commonly known as "black rust"). To minimize conditions which can cause staining, the following precautions are recommended.

NOTE: Follow storage requirements listed on products.

5.1.1 If moisture is found, promptly wipe each piece dry.

5.1.2 If erection will be delayed more than 72 hours after delivery, store all materials in a dry location with fairly steady temperatures and adequate air circulation.

5.1.3 If site and/or changing weather conditions cause condensation on materials' surfaces, DO NOT allow moisture to remain between pieces of stacked materials, or on formed sections. DRY each piece as soon as possible after moisture is discovered. Promote air circulation through material stacks and if available, use fans to insure adequate air movement among stacked materials.

5.2 If proper storage facilities are not available in the field prior to installation, sheets may be stored for a limited time (24 to 48 hours) by placing wood blocking or cribbing between them to permit air to freely circulate and allow moisture to drain from finished surfaces.

5.3 Never cover galvanized material with plastic sheets or wrappings; plastic will trap moisture, possibly creating worse conditions for condensation to occur.

6. PREPARATION

6.1 Your Trachte building has been manufactured to strict quality-controlled tolerances to ensure the highest quality product. The proper sizes, types and shapes are accurately placed at the locations indicated on the plans and details.

6.2 Trachte furnishes general foundation plans and details for the concrete slab which will support your building; however, Trachte is NOT responsible for control of site conditions nor installation of the concrete slab. The following paragraphs outline some general recommendations which will help to ensure that your Trachte building will give you many years of satisfactory service.

6.3 Dimensional tolerances: To ensure that your Trachte building is properly supported, the concrete slab must be the proper size. Ideally, it should be exactly the size shown on the plans. Practically speaking, concrete is not a material which lends itself to such precision and minor variations can be allowed.

6.3.1 If the slab is too narrow or too short, columns at the slab edge may not be adequately supported. This condition MUST be remedied before proceeding further.

6.3.2 If the slab is too wide or too long, you will have to adjust the layout of the building components so doors function properly.

6.4 Placement and compaction of sub-slab materials, and placement of the concrete slab and reinforcement are critical to successful building completion. Therefore, it is recommended that you employ contractors who are regularly engaged in, and experienced with, commercial building construction projects.

6.5 Before the concrete slab is placed, have a properly prepared base (*see notes on building foundation plans).*

6.5.1 Inadequate or uneven compaction may cause the concrete and/or the building to settle unevenly, causing undesirable floor slopes or cracks.

6.5.2 Trachte recommends that an experienced geo-technical engineer be employed to test the prepared base material to verify that it is properly compacted before concrete is placed.

6.6 Use wood or steel forms, set to proper levels and dimensions and properly braced against movement, to contain the concrete while it is being poured.

6.7 Make sure that reinforcing of the proper sizes, types, and shapes is accurately placed at the locations indicated on the plans and details.

6.8 Check overall dimensions of slab forms before concrete is poured to ensure the finished slab will be the proper size *(see paragraph 6.3*). It is much less expensive to adjust forms than to repair hardened concrete later.

6.9 The concrete mix, which determines its ultimate strength, should be as indicated on the plans. An experienced civil or structural engineer can perform this service for you.

6.9.1 Make sure that concrete is adequately "worked," i.e. spread evenly without aggregate separating from the cement or formation of pockets. Concrete should be worked in thoroughly at the forms around the slab perimeter to eliminate trapped air which causes "honeycombing," or pockets of exposed aggregate at the edges when forms are removed.

6.9.2 Honeycombing creates undercut areas and weakens the concrete slab. All such areas must be repaired before building components are installed.

6.10 Make sure that personnel placing and finishing the concrete slab take extra care to closely "hold" the width and depth dimensions of the recessed area ("notch") around the edge of the slab.

6.10.1 This notch forms a "sill" at each door opening and will remain exposed when the building is erected. It should have a smooth, level, troweled finish the same as main floor surfaces.

6.10.2 Although some allowance for slab variations can be tolerated by your Trachte building components, erection will be simplified if components do not have to be adjusted to compensate for an uneven slab surface or variations in width and depth of the notch.

6.11 Inspect the slab again after the concrete slab is poured to verify that it is square, the proper size and finish to receive the building.

6.12 Length and width should be as indicated on the drawings and details. If they are not, repair the slab before proceeding further. Refer to figure 3 on page 9.

6.13 Check slab squareness using a transit, if available, or by the "right triangle method," (see fig. 2). Start at one corner of the slab and mark 6 feet [1.83m] in one direction and 8 feet [2.44m] in the other. Measure the distance from the 6-foot mark to the 8-foot mark. If the slab is square, the distance between marks should be 10 feet [3.05m]. Check for squareness by measuring the diagonals of the slab. A nice square slab will have both diagonal measurements within 1/4" of each other. If the slab is more than 1/4" out of square, adjustments must be made when assembling the structure. (sec 9.1)

608.837.7899

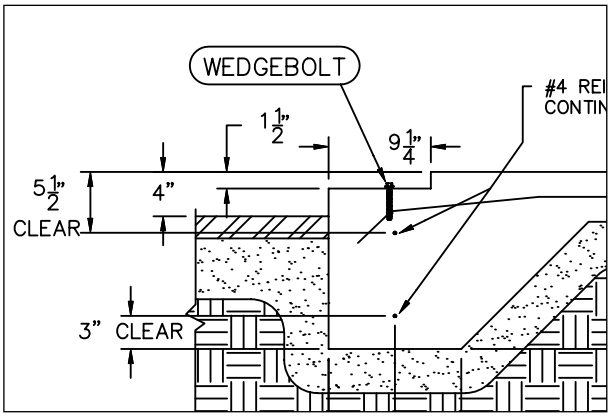

* Foundation detail is a floating slab. Your foundation may be different.

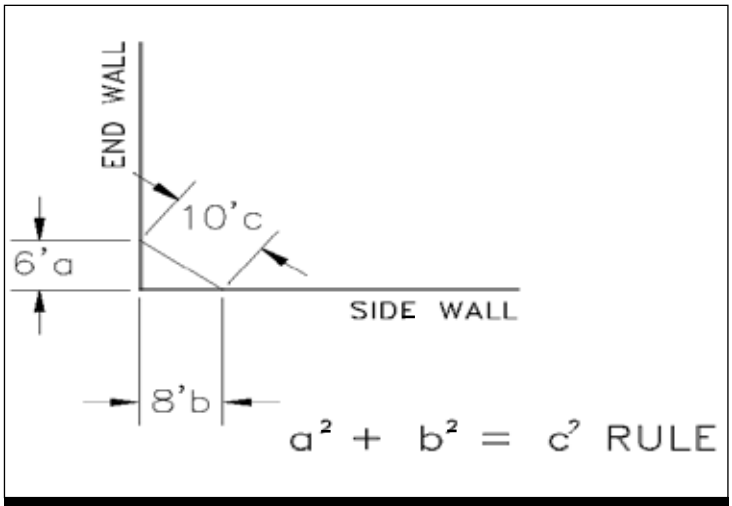

Fig. 2 - Right Triangle Method

6.14 Check level of the slab floor surface by laying a 10-foot straightedge on the surface at random locations. The surface should vary no more than plus or minus 1/8 inch [3mm] measured anywhere along the straightedge.

6.15 Check the quality of the slab; look at the overall appearance. Floor surfaces should be smooth and even, with no gouges, trowel marks, or pitted areas. Walk around the perimeter and look for "honeycomb" areas (voids where aggregate is exposed) in the edges. Honeycomb areas weaken the slab and must be repaired before proceeding with building erection.

6.16 Check the notch, or recessed area, at the perimeter of the slab. It should be trowel finished and of the uniform width and depth indicated on the plans and details.

6.17 Repair the slab and correct any defects such as "honeycombing," or pits in finished surfaces. Repair time should allow time for repairs to cure properly (minimum seven days).

6.18 Allow the slab to cure 14 days before starting building erection. This will help ensure that concrete is hard enough to prevent damage to floor surfaces during erection.

6.19 Paving: If you plan on concrete or asphalt paving around the building, **it is best to place it before erecting the building to avoid possible damage to building components or finishes.**

6.20 Site cleanliness: Although minimal debris is produced during erection of a Trachte building, less chance of damage or loss of components or parts will occur if the building site is kept clear of trash and debris at all times.

6.21 Weather: High and/or gusty winds can damage inadequately braced walls and unattached building panel sheets during installation. Be aware of oncoming weather conditions and plan accordingly.

7. RECOMMENDED TOOLS

To expedite the erection of your Trachte building, have the following types and quantities of tools available.

- ☐ 2 ea - Drill and screw gun
- ☐ Impact wrench with 3/8" socket/person
- ☐ Hammer drill with appropriate bits for anchors
- ☐ 3/8" drill with 1/8" [3.2mm] dia bits for pop rivets
- ☐ 1 set/person - 3/8" or ½" Ratchet handle and sockets
- ☐ Assortment of box and open end wrenches
- ☐ 1 ea - Pop rivet tool
- ☐ 3 ea - 6 foot [1.83m] step ladders
- ☐ 1 ea - 8 foot [2.43m] step ladder
- ☐ 1 ea - 10 foot [3.05m] step ladder
- ☐ 400 ft [122m] - Electrical extension cords
- ☐ 4 pr - Self-locking welding clamps
- ☐ 2 pr - Compound tin snips
- ☐ 1 ea - Electric nibbler/shear
- ☐ 4 ea - 4 inch [19cm] C-clamps
- ☐ 2 ea - Rubber head mallets
- ☐ 1 ea/person - Tape measure, 25 foot [6.1m]
- ☐ 1 ea - Tape measures, 100'
- ☐ 1 ea - Mason's level, 4 foot [1.22m] or longer, **magnetic level** works best
- ☐ 2 ea - Drift pins
- ☐ 2 ea - 1/4" Hex nut runner bits
- ☐ 2 ea - 5/16" Hex nut runner bits
- ☐ 2 ea - 3/8" Hex nut runner bits
- ☐ 1 ea - Chalk line, 20 foot
- ☐ 1 ea - New, waterproof, black "jumbo" marker
- ☐ 1 ea - Heavy duty stapler for stapling insulation seams (optional)

8. FASTENERS

8.1 Trachte Building Systems, Inc. furnishes all fasteners to completely erect the building.
*Except pins used in base plate (Customer is reponsible for them.)

8.2 Trachte recommends paying close attention to the types and sizes of fasteners described in the text for assembling each portion of the building. Always use the correct fastener, in the proper quantities as shown on erection drawings, for the intended application, particularly self-drilling screws.

9. LAYING OUT THE BUILDING

9.1 When satisfied with the slab overall length, width and squareness, proceed with laying out the building. You will be snapping a number of chalk lines on the floor slab to ensure that building components are erected square and plumb, even if the floor slab is not. Chalk lines will also locate interior columns and wall lines. Per plan, slabs are commonly oversized by 2”. Based on the accuracy of the pour the plan layout may need to vary.

NOTE: It is recommended to not use Red or Black chalk as it is difficult to remove.

49.2 Locating the first structural line: Select a starting corner (See fig. 3), preferably one that is square. Measure 5’ - 1” along the end wall and mark this location. From the 2nd corner, measure in 5’ - 1” along the end wall and mark this location. Snap a chalk line between the marks. Ideally, at any point along the sidewall, the chalk line will be a minimum of 5’ - 0” from the edge of the slab.

9.2.1 Locate this line carefully; it will be the main alignment point for building wall erection.

9.2.2 Measure the length of the slab along this chalk line; it should be at least as long as the length shown on the plans and details. If it is not, correct this condition before proceeding further.

9.3 Locate the first perpendicular line across the slab by constructing a true perpendicular line to the first line snapped.

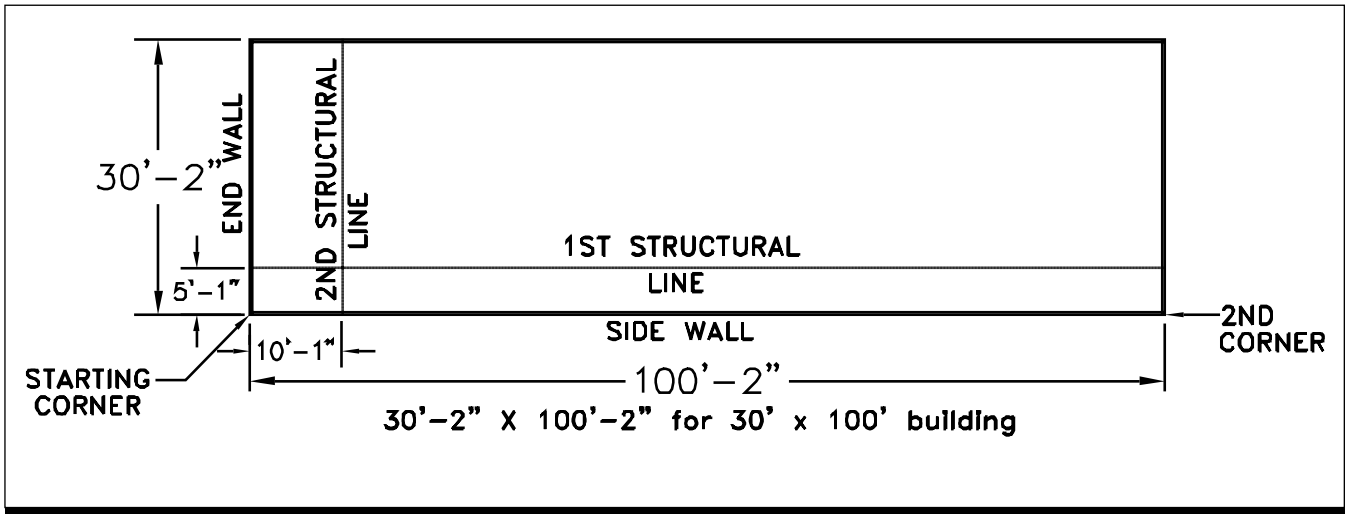

Fig. 3 - Locating The First Line

9.3.1 (*see fig. 4*) First, measure along the chalk line 10 '1" in from the end wall of the slab. Next, construct a "6-8-10" triangle on the 10-foot mark and extend a chalk line from edge-to-edge across the short slab dimension (width) (*see fig. 2).*

9.3.2 Measure the WIDTH of the slab along the second chalk line; it should be the same as shown on the plans and details.

9.4 Locate lines across the slab width *(see fig. 5)*. At each edge, from the first structural line, on the end walls, mark 5'0" foot intervals and snap a chalk line across the slab on each set of marks. Check the distance from the LAST line snapped to the sidewall of the slab; it should be 5' - 1".

NOTE: The line near the edge of the slab should fall on the slab. If the line at the edge misses the slab, move your first line over as needed.

9.4.1 If the last line snapped is less than 5' feet [1.52m] from the edge, check for layout errors and do not proceed further until the error is corrected or repairs are made which bring the slab to the proper dimensions.

9.5 Verify all dimensions again to make sure chalk lines are parallel or perpendicular to each other and create a precise 5' X 10' grid. Ensure all perimeter chalk lines fall on the slab.

9.6 If poured correctly the slab is oversized in both width and length. Adjust chalk line locations so any excess width and/or length is divided evenly and occurs at the slab edges. For example, if the slab is one inch longer than it should be, adjust chalk lines so that ½ inch of the slab extends beyond the building at both ends.

9.7 Once satisfied with the chalk line locations, mark the chalk line intersections with a waterproof marker so they won't be washed away or wear off during construction.

9.8 Check for flatness of slab. Variations on the slab height will show up on the roof system. High and low spots should be marked. Attention should be given to variances that occur near the chalk lines, so that any adjustments to the building can be planned for.

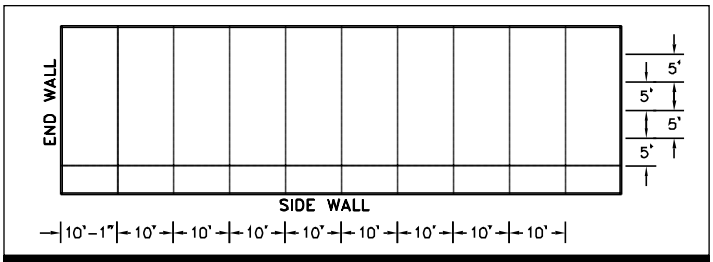

Fig. 4 - Squaring The Lines

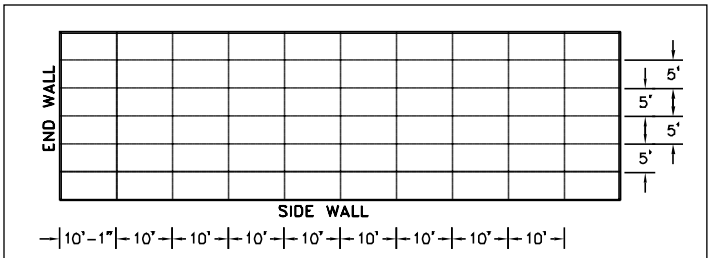

Fig. 5 - Laying Lines Across The Slab

www.trachte.com

FASTENER DESCRIPTIONS

	#12 x 3/4” long self-drilling screw #760600 zinc #7606__ when colored	Attaching wall strap bracing, ends of roof insulation, partition paneling. If colored, for trim.
	#12 x 1 1/4” long self-drilling screw #710969	Attaching liner panel over insulation, fastening standing seam roof clips and closures.
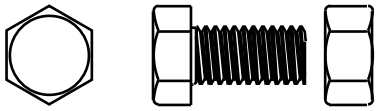	3/8” dia x 3/4 long hex head bolt #760110 (use nut #760300)	Attaching door jambs to headers. Attaching typical framing members to each other.
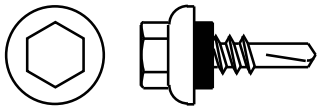	#12-14 x 3/4” long screw w/epdm washer #104___	Attaching (stitching) roof panels to each other. Colored screws are to attach wall panels together.
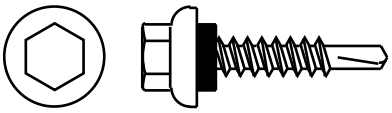	#12-14 x 1 1/4” long screw w/epdm washer #104___	Attaching roof panels to roof supporting members, structural connections only. (purlins and closures) Colored screws are to attach exterior wall panels to structure.
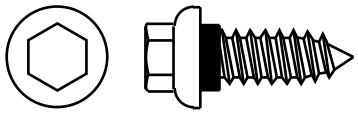	#17 x 1” “ZAC” head screw w/epdm washer #104132 #14 x 1-1/2” OD washer w/ edpm #506616	Used at roof holes where correct screw accidentally missed roof purlins. Roof repairs (holes) only.
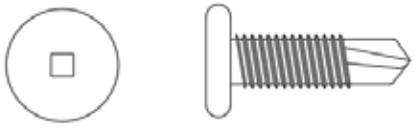	1/4-14 X 1 SQ Pancake Screw #508864	Attaching rake angles and roof cross strapping.
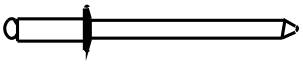	Pop rivet, colored #7620__	Attaching all trim pieces and flashing together.
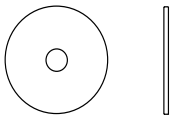	Fender washer #766000	Used under fasteners for attaching ends of insulation to building.
	Tapcon 1 1/4” Concrete Anchor #502840	Fastening base track or channel to existing floors.
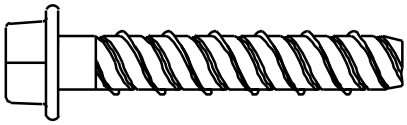	3/8” Wedge bolt/Dewalt screw bolt #5055008490 2.5” #5055008590 3” #5055008390 4” Uses 3/8” ANSI masonry bit by others	For anchoring, column & jamb base plates to the concrete slab. WARNING: Use the correct length wedge bolt as specified in your erection drawing.

608.837.7899

10. UNDERSTANDING YOUR SPECIFIC PLANS

Before starting building assembly, take time to carefully study your erection drawings and this manual. Both will help you understand the plans and give you details to help you erect the building. This manual will not have any of the specific building parts labeled that are all on your plans. The manual will help you understand where the details are and how the finished product will look. Below is the explanation of what each sheet letter stands for and why there are multiple numbers for each letter. On the top right hand corner of your cover page is an "Index Sheet" that describes where all the details are to build the building.

Sheet Index

PAGE #	DESCRIPTION
A1	FLOOR PLAN – BLDG "B"
B1	FOUNDATION PLAN
C1	ERECTION ELEVATIONS
C2	ERECTION ELEVATIONS
C3	ERECTION ELEVATIONS
C4	ROOF FRAMING PLAN & DETAILS
E1	SIDEWALL PAGE
F1	PARTITION PANEL PAGE
F2	PARTITION PANEL PAGE
H1	CORRIDOR DETAILS
H2	CORRIDOR DETAILS
G1	PANEL & TRIM DETAILS
J1	MISCELLANEOUS DETAILS GUTTERS

PAGE NUMBERS:
Page numbers will consist of a letter (specific to the category of that page) and a number (beginning with "1" and continuing subsequently for multiple pages). Each letter (category) will begin with "1". *Example: A1, B1, C1*

Note: We will not use letters "I" or "O", as they are often mistaken for a "one" or a "zero". The cover page will be named "Cover Page". Typically, the Floor Plan Pages are listed first, followed by Foundation Pages, Interior Pages, End wall Pages, Sidewall Pages, and so on. From the chart below, select the corresponding letter to begin numbering your pages.

PAGE	CATEGORY	DEFINITION
Cover	Standard Cover Page	Contains description, abbreviations, notes, code body, etc.
A	Floor Plan & Elevations	Use for all floor plans and general sidewall & end wall elevations
B	Foundations	Use for foundation plan views and all foundation details
C	Erection Interior & Endwall	Use for elevations & sections to detail all structural building components and related connection details for interior walls, end walls, fire walls, stairwells, lifts, elevators, roof framing plans
E	Erection Sidewalls	Use for elevations & sections to detail all structural building components related connection details for sidewalls, fire walls, steps
F	Partitioning	Use for all partitioning details with or without insulation and longitudinal interior fire walls
G	Roof	Use for roof insulation details and roof paneling details
H	Corridor	Use for detailing entries, corridor floor plan, corridor details
J	Miscellaneous Details	Use for detailing doors, windows, mansard, gutters, parapet, & any other details that wouldn't fit on a desired page.

11. TYPICAL BUILDING COMPONENTS:

Below are illustrations of components used to assemble the structure of your mini–storage building. Full part numbers are shown; abbreviate part numbers discussed in the text are underlined. An "_" means a digit that may vary in a part number.

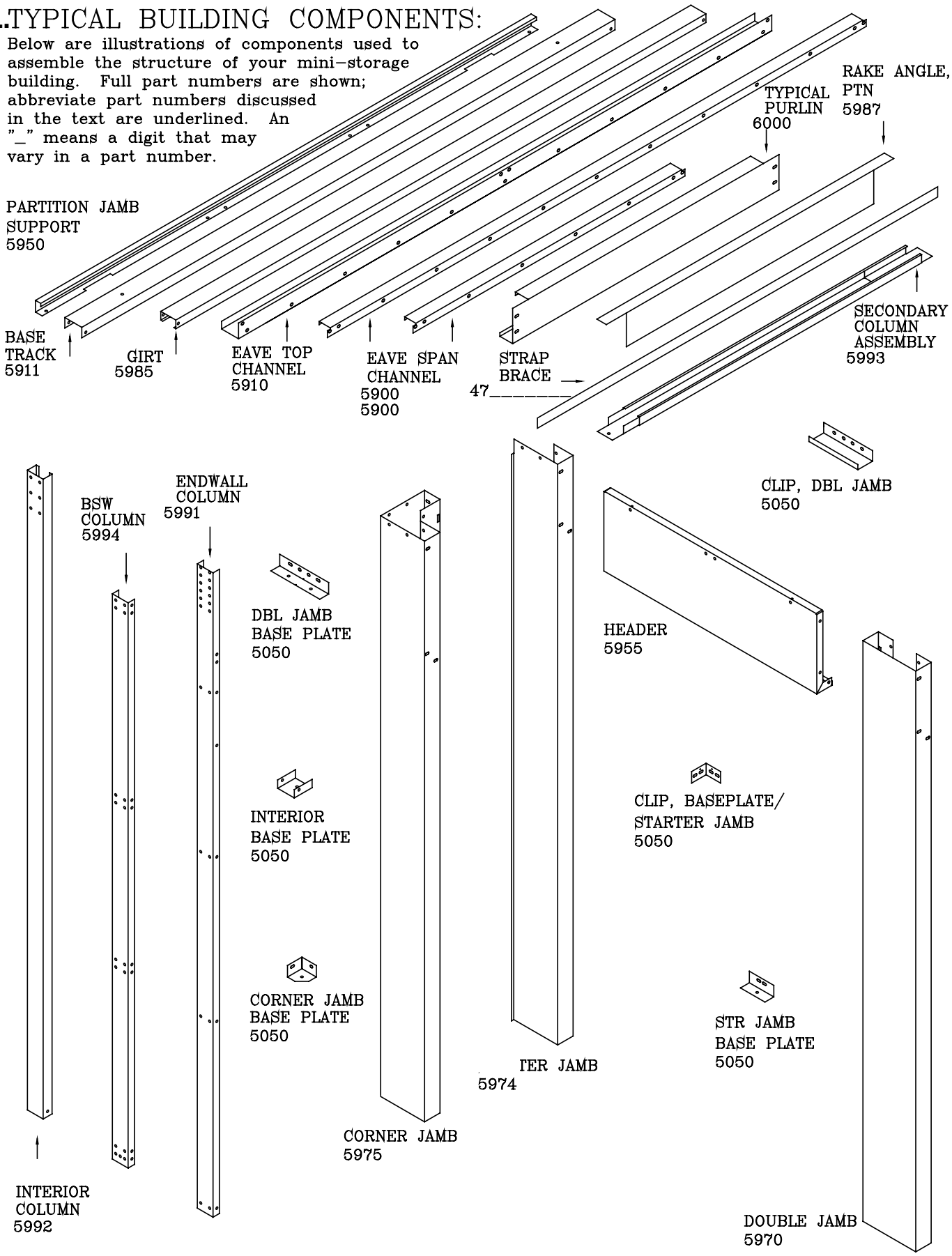

608.837.7899

12. TYPICAL ROOF, WALL, TRIM COMPONENTS:

Below are illustrations of typical components used to enclose and partition your mini-storage building. Abbreviated part numbers are shown. Refer to cover page for details on part numbering system.

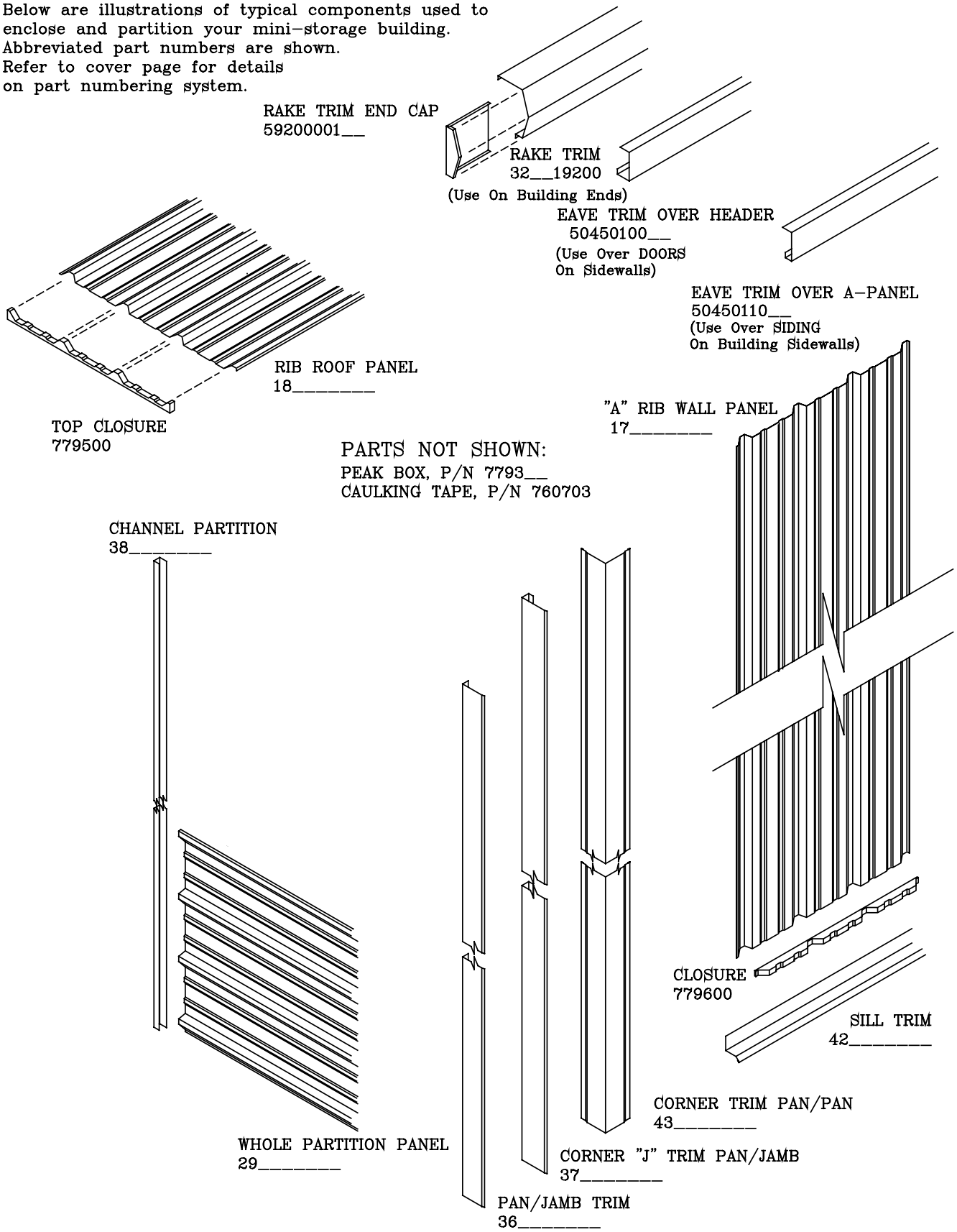

www.trachte.com

13. FASTENING DETAILS FOR VARIOUS PANELS

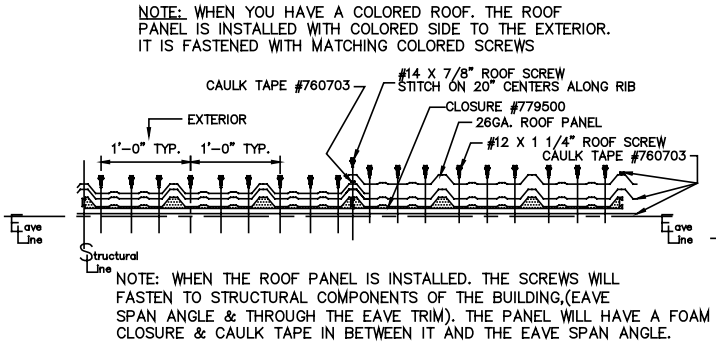

ROOF PANEL FASTENING DETAIL (AT EAVE)

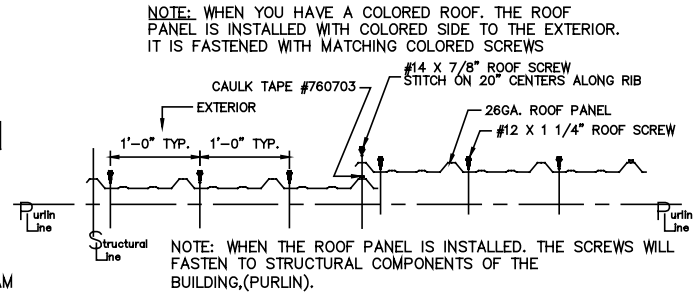

ROOF PANEL FASTENING DETAIL (AT PURLIN)

FOR R-PANEL ROOF FASTENING ONLY

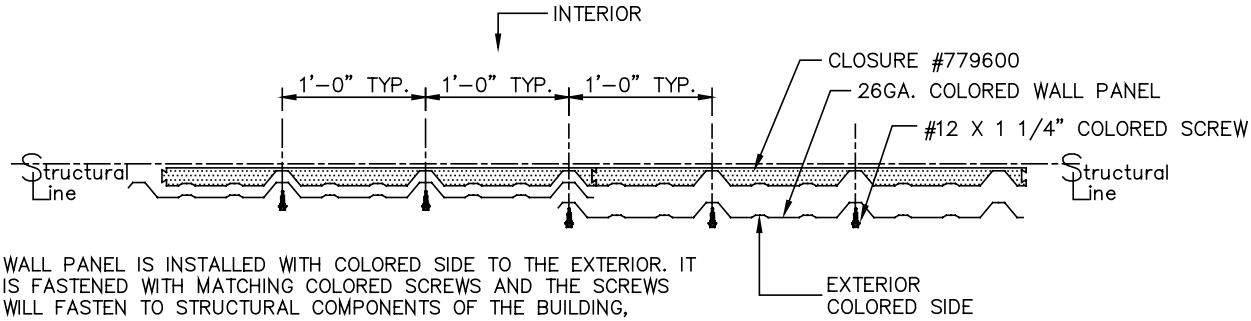

WALL PANEL IS INSTALLED WITH COLORED SIDE TO THE EXTERIOR. IT IS FASTENED WITH MATCHING COLORED SCREWS AND THE SCREWS WILL FASTEN TO STRUCTURAL COMPONENTS OF THE BUILDING, USUALLY GIRTS OR EAVE/BASE ANGLE AND CHANNELS. THE PANEL WILL HAVE A FOAM CLOSURE INBETWEEN IT AND THE STRUCTURAL COMPONENTS AT THE TOP & BOTTOM OF THE PANEL ONLY.

EXTERIOR WALL PANEL FASTENING DETAIL

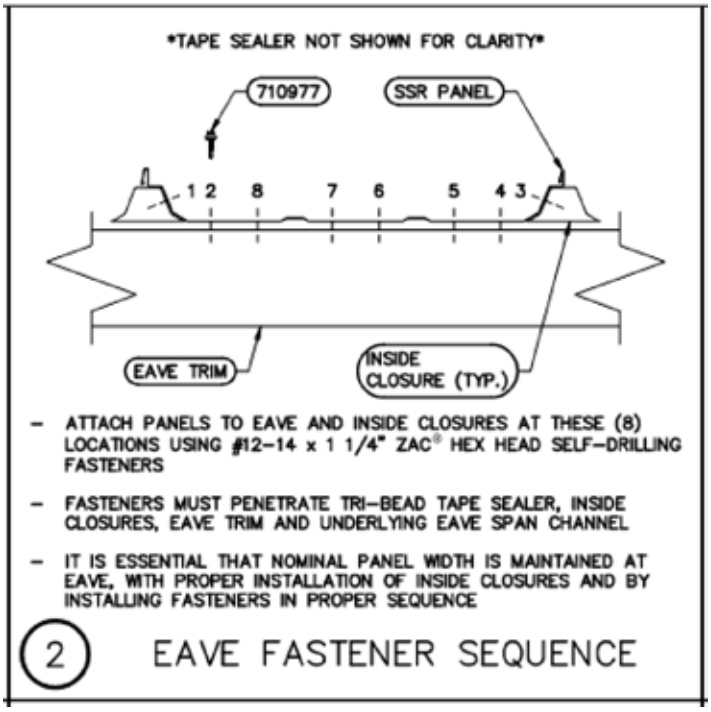

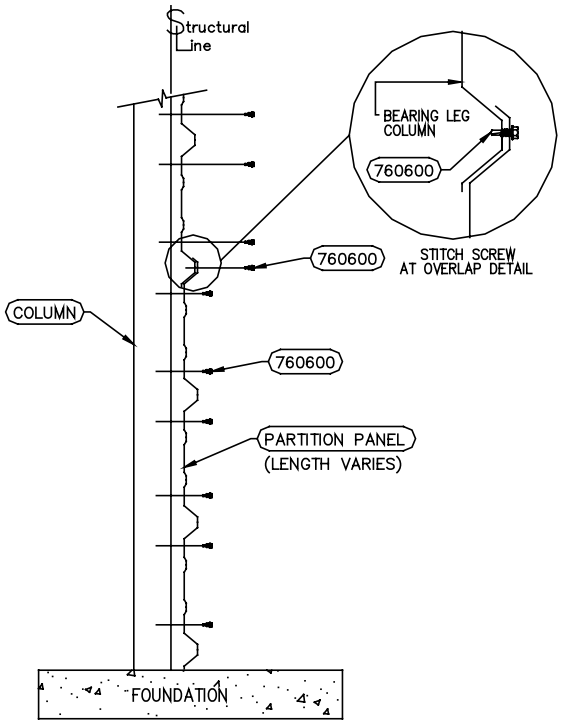

PARTITION PANEL FASTENING DETAIL

ATTENTION: Partition wall panel lengths were determined with the panel starting at least 3½" in from the sidewall. All buildings 25' or more will have 2-panels that lap at a interior column line. The panels should overlap at least by 1".

608.837.7899

STEPS 1- 30 LAYOUT THE INTERIOR STRUCTURE AND INSTALL AND BUILD THE FIRST INTERIOR BAY AND SUBSEQUENT BAYS.

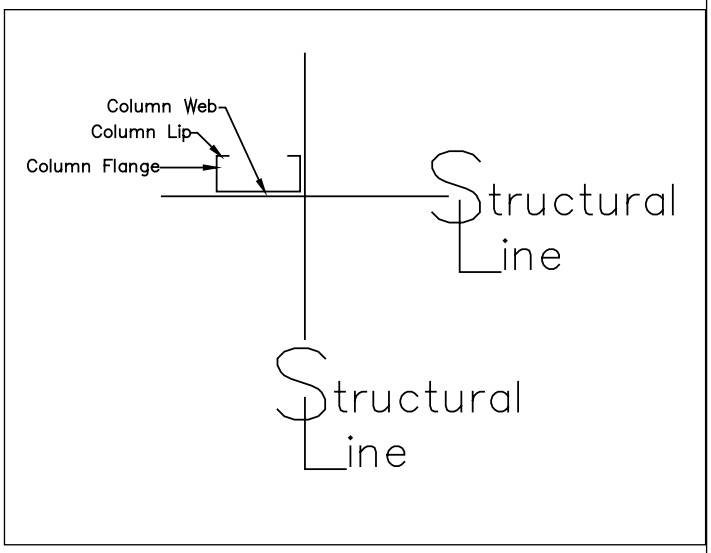

1. Chalk out structural lines as described earlier in section 9, page 9. Accurate location of the structure lines is critical for the success and ease of assembly of your building. Refer to your floor plan on the page labeled A1 to find out what side the columns are located on the structural line. Start laying out the interior base anchors on correct side of the structural lines. The detail on the right illustrates where the base plates are located.

NOTE: The web of the column always falls on the structural line. The flange always points away from the ridge (or high side of a lean-to).

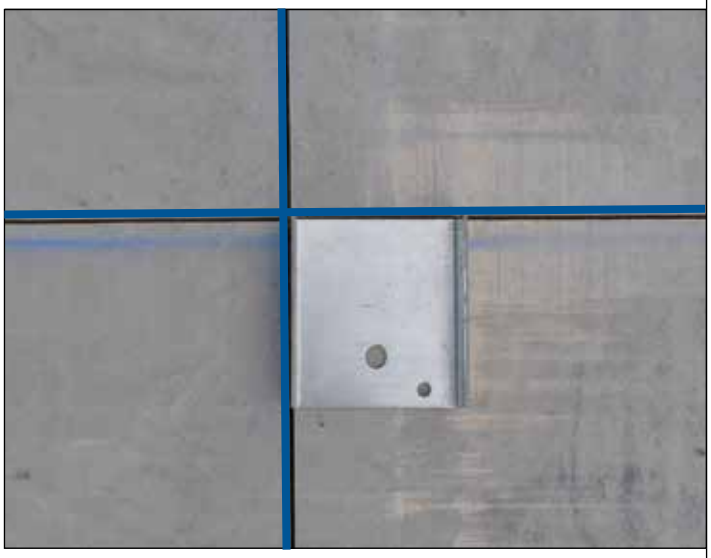

2. The location of the base plate should follow the structural lines. Once the base plate is located in the correct spot, anchor the base plate with the wedge anchor bolts provided. A pin anchor (not supplied by Trachte) needs to be installed in small hole provided.

NOTE: For pin anchor use Zamac hammer screw Tapcon, or other approved alternative.

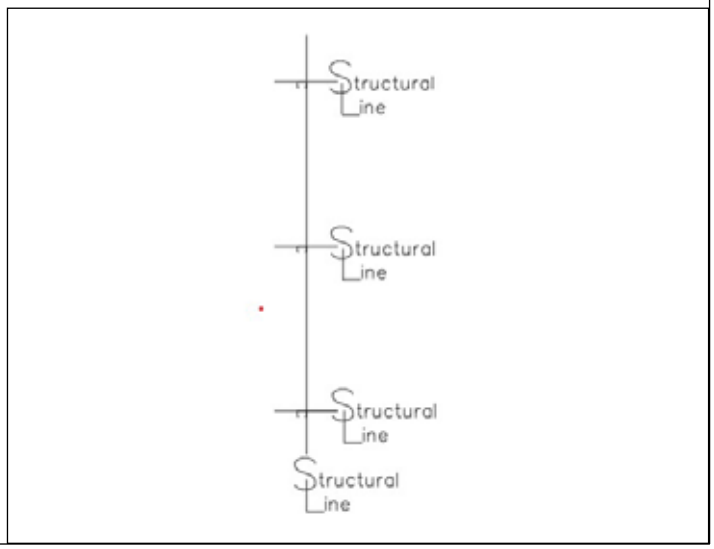

3. The floor plan shows how and where to locate the columns. The base plates should be oriented following the floor plan on sheet A1 throughout the length and width of the building. Notice that the base plate orientation changes once you get to the center of the building and the interior columns flanges point to the sidewall.

NOTE: On a lean-to building the column, orientation does not change.

www.trachte.com

4. Install the interior column base plates on the same side of the structural line. Center the door jamb base plate on the structural line as shown. The door jamb base plate will not be installed until after the first wall is built. This photo shows you its location.

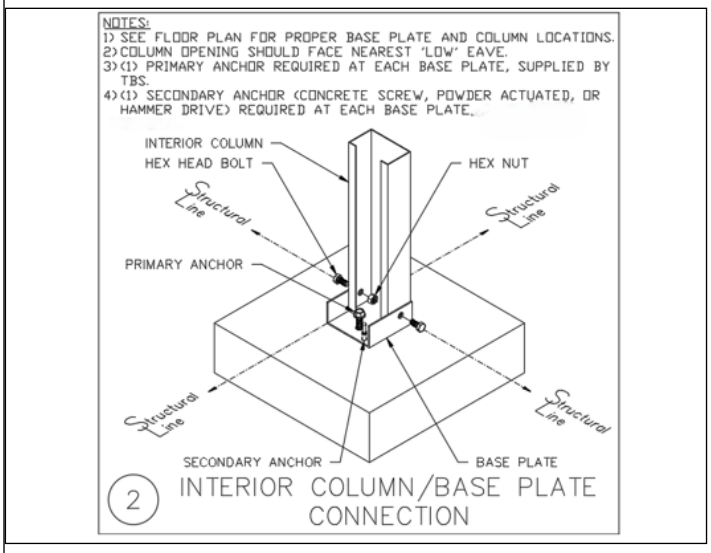

5. This detail shows how to install an interior column to the base plate. Note the web of the column is oriented on the structural line. The base plate needs both a wedge bolt, Tapcon, or other approved alternative.

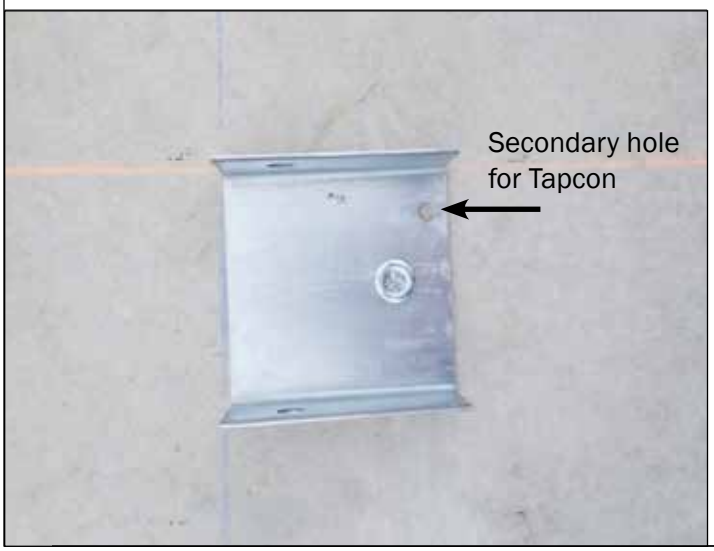

6. This is a photo of base plate with wedge bolt, secondary anchor of Tapcon not yet installed. The column once installed, on a properly anchored base plate, will stand on its own.

7. At least one bay of your building will be the "starter bay". If the building has fire walls or steps then it may have more than one starter bay. The starter bay is where the column base plates are located in between the structural lines. See figure at right for details. The starter bay is denoted on the "A" sheets of the plan. It is critical that you place the base plates and columns in the correct spot. This bay will also use "starter purlins" which are shorter than the typical bay purlins.

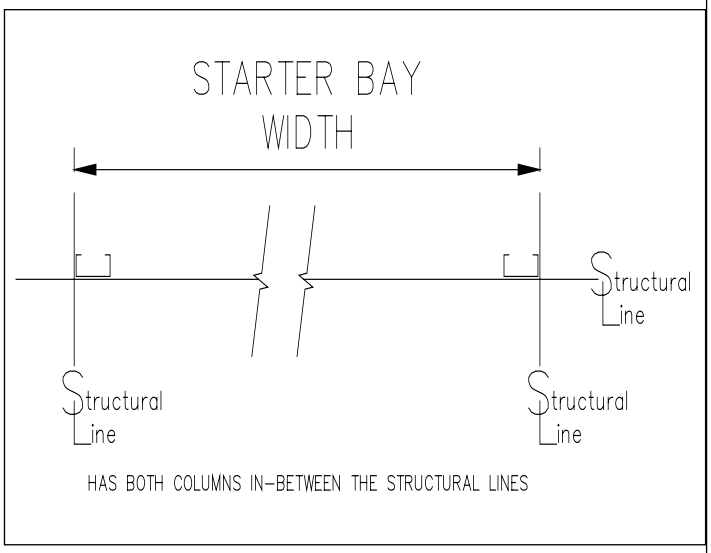

NOTE: It is ideal to begin at the starter bay. Build this bay accurately and brace it well. This is the basis for all the typical bays you will build upon.

8. Install the columns to the base plates on the starter bay.

9. The columns look like this when attached to the base plates. Note the door jamb base plate is located left of the structural line. The door jamb base plate will not be installed until later (this photo is for reference only).

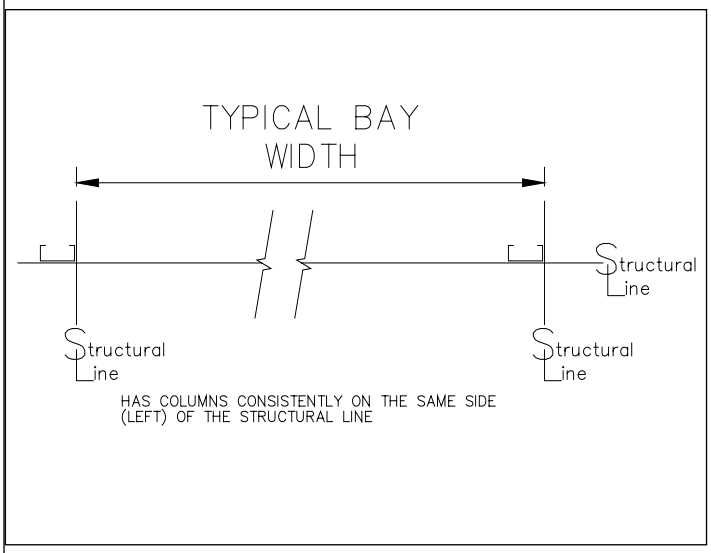

10. The column location on a typical bay is on the same side of the structural line. Layout the base plates following the floor plan on page A-1 of your erection drawings.

11. The starter bay columns are installed on the left side of the column line.

12. Plumb and brace the first wall (starter bay) using the partition channels to temporarily brace the columns. The braces will be removed and reused later once the walls are stabilized.

608.837.7899

13. Temporarily install a double door jamb base plate using one base anchor that will be removed later. Tek screw the bracing to the base plate. To avoid putting holes in your concrete, you may want to use the telescoping secondary column and attach it to the base plate of the adjacent wall.

14. First plumb the column, then Tek screw the brace to the base plate. Once braced, the line of columns should be plumb and aligned in a plane across the width of the building. This row of columns will need to be plumbed in the other plane now.

NOTE: Refer to the drawing cover page for more information on detail.

15. This photo shows a row of columns accurately anchored to the slab at appropriate chalk line locations. The columns are all plumbed and braced in 1-plane.

NOTE: If building has sectional doors by others the first and second column lines may need to be turned 90°. (Refer to drawing.)

16. Mark a chalk line identifying the outside perimeter of your building. Place another chalk line 3-3/4” to the inside of the perimeter line. This will serve as a reference line to locate the outer edge of your partition wall.

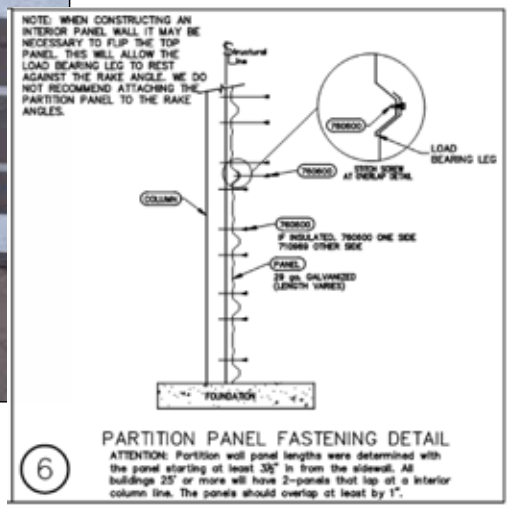

17. If the double door jamb base plate is installed, the partition location will look like this. Check the edge of the panel to make sure the panel is installed plumb.

18. To plumb the column row in the other plane, install the first partition panel. Refer to your erection drawing sheet F to determine which partition panel to use. If your building is over 20’ wide, you will use two pieces of partitioning across the width.

19. Once the location of the partition is determined, plumb each column. Then attach them to the partition using a C-clamp. Tek screw the partition into place using the #12-3/4" Tek screws #760600.

NOTE: Ideal speed to drive screw is 1,800 RPM. High RPM can cause the tip of the screw to burn out before the screw can cut into the steel.

NOTE: The partition panel can be installed with the purlin bearing leg either towards the concrete as shown in your detail or with it up as shown in the picture. If the purlin bearing leg is installed down, it will be easier to partition because the second panel will nest inside the first, therefore you need less people to install. If there are problems with the concrete, install with the purlin bearing leg up, push down the partition panel to fill the voids in the concrete, then install. (See page 15)

20. For a building wider than 20' attach the second partition sheet to the columns. Line up the opposite end of the partition to the chalk line, like in photo 17 & 18. Panels should overlap at the center near a column. Refer to F-sheets in your building plans.

21. Plumb each column and C-clamp them to the partition before Tek screwing. Do not screw at the top rib until your lapping (next) panel row is installed.

www.trachte.com

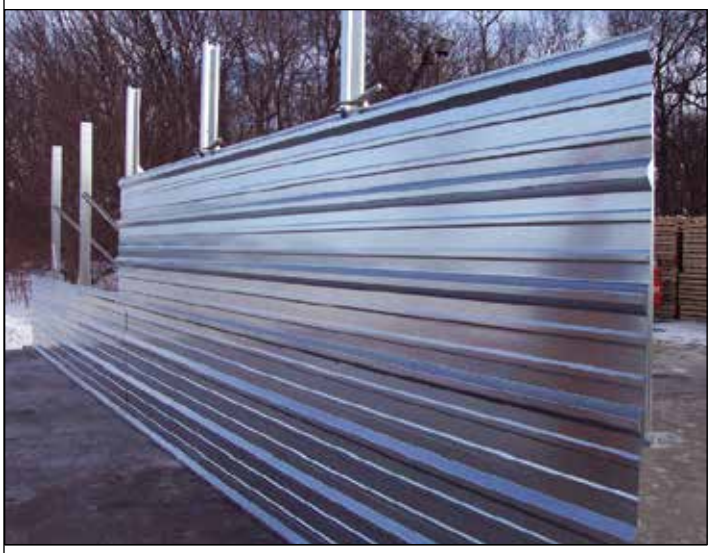

22. Install the second row of partition panel by lining the end up with the existing sheet. Check the edge to verify it is plumb and level. Hold the panel using C-clamps, then Tek screw into place.

23. Finish installing the second row. Once installed, the wall will be braced in both planes. Now you have a stable and plumbed wall in which to build off.

24 Do not install any screws in the top 1' of the partition panel. The top panel may back lap the panel below it. You may need to field cut the top panel to match the roof pitch. Refer to drawing cover page to locate erection drawing detail on partition panels.

25. It is time to install the starter purlins (6001) in the starter bay. Refer to drawing cover page to locate erection drawing detail on roof framing plan.

26. Install the purlins in the starter bay as shown. The open part of the C-purlin always faces the outside of the building. Purlin should always be installed on the flat side of the column. Refer to page 16 for column layout.

27. Attach the purlin to the column and bolt to the top set of holes. The lower 2 holes are for deeper purlins utilized in special situations. The purlin has horizontal oblong holes to allow for adjustments in order to achieve a plumb column.

28. On all subsequent column rows, one row of partition panels will be installed. Install the partition panel on the structural line side of the column. The first bay in this photo is a starter bay. Therefore the partition is located on the opposite side (structural line) of the column compared to the other column row.

NOTE: More bracing is recommended on larger buildings.

29. Once the starter bay is built and solidly braced and plumbed, you can proceed to build all the typical bays. Typical bays will use typical bay purlins (6000 P/N series). At this point, bracing should be minimal. Continue to brace and plumb as needed.

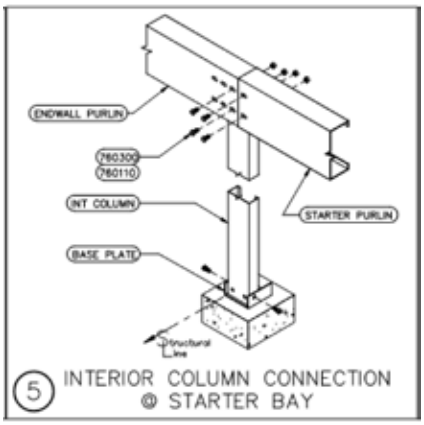

30. Continue to install the next column rows, purlins, and one row of partition panel. Plumb and stabilize each column row as you go. Work up to within the last bay of you building. The end walls and end bays will be erected later.

608.837.7899

STEPS 31- 51 INSTALL THE DOOR JAMBS AND HEADERS ON A SIDEWALL.

31. Pre-assemble the door jambs before installing. Bolt jamb clips to the jamb and then bolt the jamb support into place. Refer to the erection drawing sheet “E” for part numbers for each of the pieces.

32. Bolt the two jamb clips to the jamb and jamb support. The web of the jamb support should fall on the center line of the jamb assembly. The supports should be installed to create left and right hand jamb assemblies. You’ll need one hand for the near sidewall and the opposite for the other sidewall.

33. Bolt the base plate to the bottom of the door jamb. Then bolt the support to the base plate. The support is universal so it can be bolted on either side of the girt clips to make left or right hand assemblies. The web of the support must be lined up on the structural line so that the partition panel can be fastened to it. The flange of the support should be on the same side of the structural line as your column line.

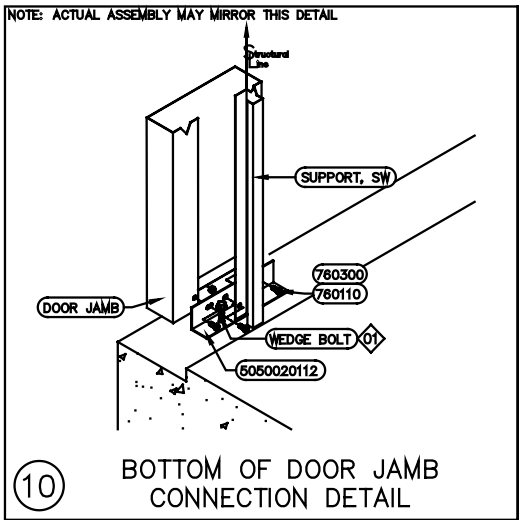

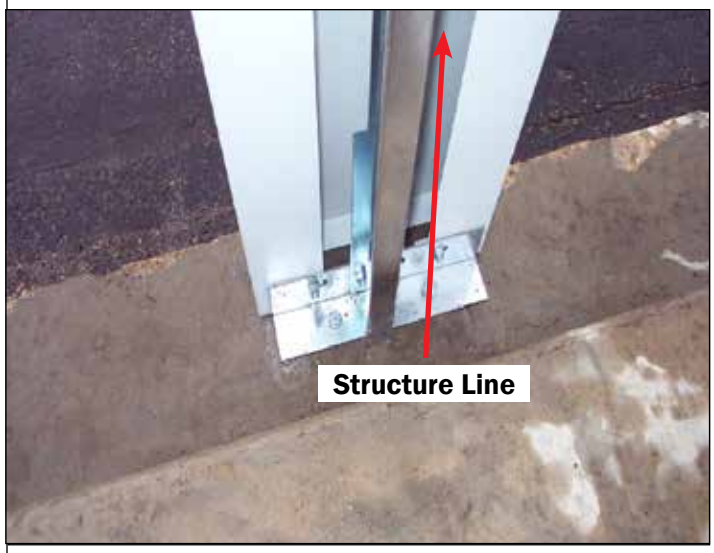

34. Bolt the support to the base plate. The web of the jamb support must line up on the structural line. This photo illustrates how the door jamb is installed utilizing two wedge bolts. Typically the partition wall is already in place before you would install the jamb (refer to photo below).

35. Plumb the first and last door jamb at the opposite ends of the building. Then attach the partition panel to the jamb support to hold the jamb assembly plumb. Refer to the “F” sheets in your plans.

36. Install the remaining door jambs on the sidewalls of the building at this time. Do not attach them to the partition. They will not be attached to the partition until the headers are installed and a string line is set up (refer to photo 45).

37. Refer to the cover page of the plans for more detail on headers. Lift the header into place and bolt into the holes provided. Make sure you do not tighten the bolts until you know the outside face of the header is flush with the door jamb.

38. An installed door jamb and header look like this. Only the first jamb is fastened to the partition at this time. The other door jamb is not fastened to the partition until a string line is installed later. If you need to support the jamb, temporarily clamp the partition to the jamb until you are ready to plumb and straighten the wall.

39. Install the eave span channel (5900 P/N series) to the header. The eave span channels lap at the center of the headers as detailed in the plans, refer to the cover page for more information on where to locate details on headers.

40. The door jamb has a base plate pre-installed on the top as shown in this detail. The headers bolt to the door jamb. Tighten the header bolts when the exterior face of the headers and jambs are flush.

41. The base plate may either be pointed toward the unit (as shown in the photo) or toward the outside wall. Installing it as shown in detail 12 will minimize the field cuts to the rake angle.

42. The eave span channels (5900 P/N series) overlap in the center of the header. They should be bolted approximately every 2' on center.

43. Install the next headers down the sidewall of the building. In this example, we are installing two smaller headers which divide the bay into two units.

44. Continue installing the headers, jamb assemblies, and eave span channels down the side wall of the buildings. In this situation, the span channels will overlap at the jamb between the (2) 4' door frames. Use two Tek screws to attach the channels to the headers, instead of the door jamb, **so that the door jamb is easier to disassemble if damaged.**

45. Now you have to plumb your sidewall. As an example, let's say the building you are constructing is 150' long. In this case, you would assemble, plumb, and brace the last jamb at the opposite end of the building (as shown on photos 35 & 36). At this point, each jamb at the ends of the building are plumbed. Next, install a string line on both plumbed and anchored door jambs. When you assemble the door jambs and headers down the length of the building, you can plumb them up to the string line and Tek screw the jamb support to the end of the partition panel (as shown on photos 35 and 36).

46. Plumb the jamb to the string line you have attached to both ends of the building. Clamp and fasten the partition to the support column.

47. Fasten the partition sheet to the support panel. Use two Tek screws between every rib of the partition (2 per liner foot). See page 15 or details on cover page of your plans.

48. The corner of the building will have a corner jamb or a starter jamb, which is a jamb 10” wide. Refer to your erection drawing, see cover page to get the part numbers.

49. Attach a corner jamb to the slab using one wedge bolt and a corner base plate. Install two other base plates at midpoints in the holes provided on the corner jamb.

50. The last 5' eave span channel will extend past the end of the building.

51. The eave span channel can be cut off or bent over the end of the building.

www.trachte.com

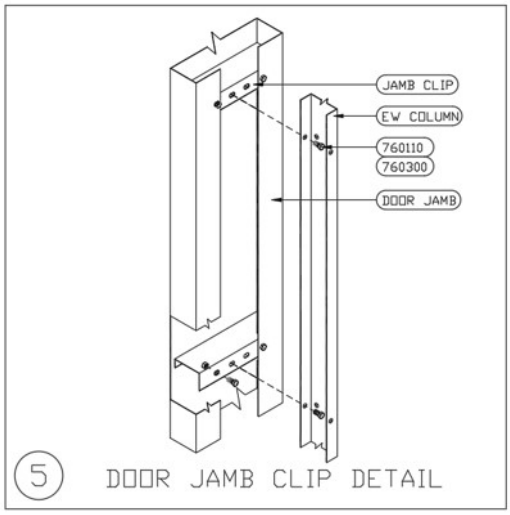

STEPS 52-69 INSTALL AN END CLOSET CONSISTING OF ALL 5' WIDE UNITS

52. See cover page of your erection drawings to get specific part numbers. The door jambs must be pre-assembled. Install two double jamb clips and a base plate to the bottom of the jamb. Install the correct end wall column to the jamb assembly. * Refer to plan on which side the flanges of end wall column go on, this can be installed incorrectly very easily.

53. Assemble so the web of the column is on the structural line. The flanges should point to the sidewall just like the interior columns. This will assure that the purlins will line up when installed.

Note: Avoid scratching painted surface by placing cardboard underneath column when assembling.

54. The end wall column is oriented on the structural line. See the cover page on the floor plan page for column orientation.

608.837.7899

55. Locate the center of the base clip on the structural line and make sure the outside edge of the jamb is on the exterior structural line. Then install with the screw anchors provided.

56. Install the end wall purlins. The end wall purlins are shown on the “C” sheets of the roof framing plan.

57. The opposite end of the purlin is bolted to the column (see photo 58).

Note: The purlins are more visible on the outside of each door jamb going up to the center of the building.

58. Attach the end wall purlin to the interior column. The end wall purlin has three sets of holes. The first set of holes attaches to the interior column (see photo 59).

59. Install the purlin to the end wall column in one set of holes in the column. Check all purlins for level.

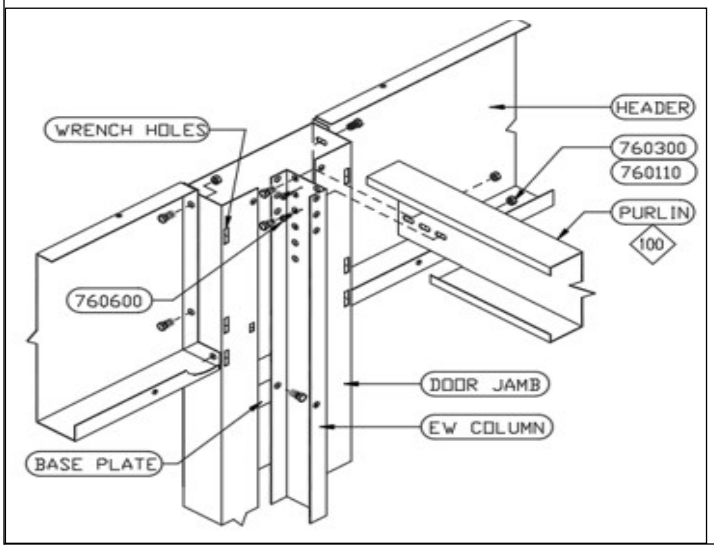

60. The purlin attaches to the end wall column on the door jamb in the inner most column of holes. Note that the end wall door jamb does not have a base plate on the top of the jamb like the sidewall does. The base plate is bolted to the end wall column just below the headers. Later when the door brackets are installed, they will screw into this base plate.

608.837.7899

61. This is an interior view of the installed purlins. This view shows purlin bridging clips installed at the midpoint. See roof framing sheet on cover page to see if your building requires roof bridging.

62. If your building has non-operating doors, install corner jamb at the corner of the building.

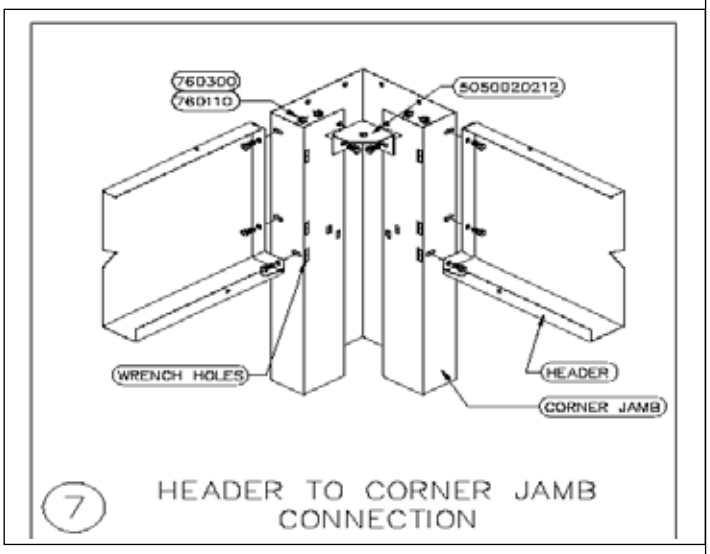

63. Install the headers to the door jambs. Refer to your plans for specific part numbers and locations.

www.trachte.com

64. This is a photo of installed headers and purlin.

65. Continue to install the headers along the end wall.

Note: On lean to buildings will 'jump up' every 20' to follow the roof pitch of the building. Please refer to your cover page to locate the end wall details.

66. Once all the headers are installed, plumb the door jamb and tighten the base plate.

67. Bolt the base plate to the jamb support. The base plate will only bolt in one location. When the doors are installed, attach the door bracket through the jamb and base plate with the Tek screws provided in the door hardware package. The door bracket shown here is installed when the doors are installed. This photo shows how the bracket will fasten to the base plate later.

Note: The door clip can be installed after the door position is determined.

68. Here is an inside view of the assembled end wall closet. Notice the installed base plates are just below the headers. The clips on the purlins are for bridging angles which were needed for this building. See cover page of your plans to see if you require any bridging.

69. The 5’ X 10’ end wall closets are now complete.

STEPS 70-77 INSTALL 10’ X 10’ END WALL CLOSETS.

70. If the building is utilizing 10’ X 10’ end wall closets, you will use a corner or starter jamb at the corner. The headers at the 10’ wide end closets are 6” deeper than those on the sidewall. Consequently, the doors used in this end wall will be 6” shorter than those used on the sidewall. See cover page of your plans for specific part numbers and details for your building.

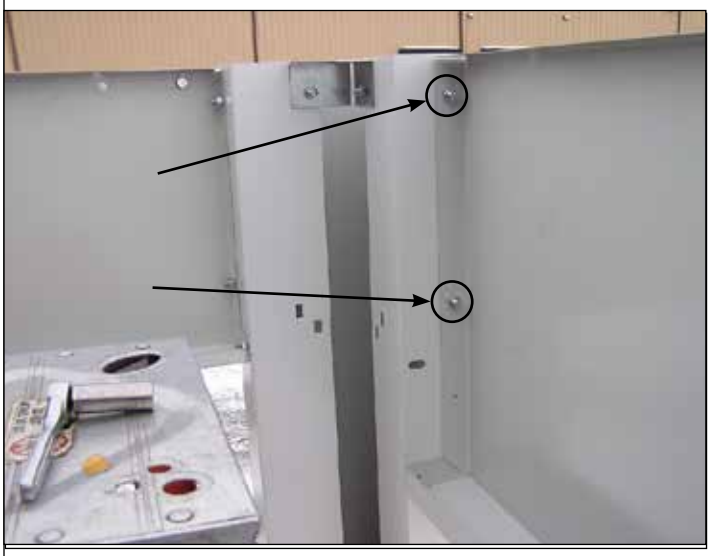

71. Install the corner jamb and bolt the deeper header to the jamb. This header has pilot holes for two Tek screws at the bottom.

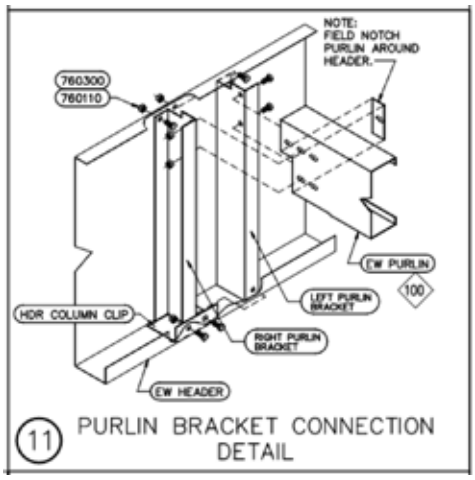

72. Install the purlin to the end wall column. See cover page of your plans.

608.837.7899

73. Install two stub columns just off center in the header to accept the purlin. Install a clip at the base of the columns. Leave bolts loose till purlin is in place.

NOTE: The purlin web and the center of these two columns fall on the 5' structural line.

74. The end wall purlin has to be notched out around the flange of the header. **The header should not be notched.**

NOTE: Field verify notch depth.
Check on drawings for field verify note.

75. Install the purlin between the columns. Use a level in order to install the purlins in the correct bolt holes. Be sure the web of the purlin falls on the structural line. *If built on a 1 degree slope purlin will be perpendicular to floor and may not be level.

NOTE: When installed properly, all purlin webs will be 5' apart.

www.trachte.com

76. The installed and notched purlin is above the header. Complete bolting in stub columns.

77. This is a photo of a finished 10' X 10' end wall assembly.

NOTE: The far side of this wall is being prepared for 10' of the A-panel.

608.837.7899

STEPS 78-86 DEMONSTRATE HOW TO INSTALL THE STRUCTURE IF YOU HAVE A BLANK SIDEWALL OR END WALL. REFER TO YOUR PLAN FOR SPECIFIC PART NUMBERS.

78. A starter jamb is used when the end wall or sidewall is attached to the A-panel. The starter jamb must be pre-assembled, bolting the clips to the jamb. A column must be attached to the clips. See cover page in your drawings for the correct part numbers.

79. Orient the starter jamb assembly on the chalk lines and anchor to the concrete with a wedge bolt.

80. Install a corner column to the starter jamb and attach the column to the base track with two bolts. The base track is anchored to the slab with screw bolts through the pre-drilled holes. See cover page of your plans.

81. Install the interior girts to the column and the clip.

82. Install the top track to the column. The shorter flange is installed to the interior. See cover page of your plans for specific part numbers.

83. Attach the top track to the column. The columns have two sets of holes. The lower set of holes are used when you do not have a notch in the foundation. The higher holes are used when you do have a notch in the foundation.

WARNING: This will effect pitch height.

84. Install the girts and base track. A starter jamb can be installed to the corner column.

85. This is a photo of the base track and column connection. Install screw bolts in the holes of the base channel. The base track also needs to be shot down with Tapcon or other approved fastener. (See note “02” on sheets C & E.).

86. Here is a photo of the sidewall transitioning into a starter jamb.

STEPS 87-98 INSTALL THE TRANSVERSE PARTITION WALLS ACROSS THE BUILDING WIDTH.

87. The rake angles are now installed on the door jambs. They must be field notched at the sidewall jamb if rake angles are purchased.

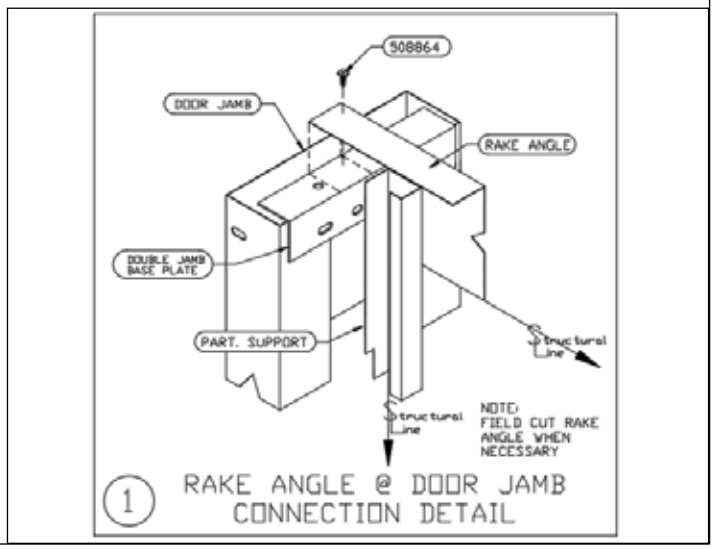

88. This is a photo of the field notched and installed rake angle at a sidewall jamb.

89. Field notch the rake angle. It is easiest to notch only one end. This photo shows the notched end at the purlin.

90. Install all the rake angles (if purchased) between the purlins. The rake angle fills the void at the top of the partition wall. Rake angles are only needed where partition panel is planned. All rake angles must be installed before roofing.

91. The long leg of the rake angle must fall on the structural line. The top flange is fastened to the top of the purlins.

92. Measure the distance to the purlin and **make a 1/4" notch with tin snip, shear or nibbler.** Lift the partition into place and attach.

93. The notch should provide clearance for the purlin web as shown.

NOTE: Make a notch as small as possible, so panel fits under purlin.

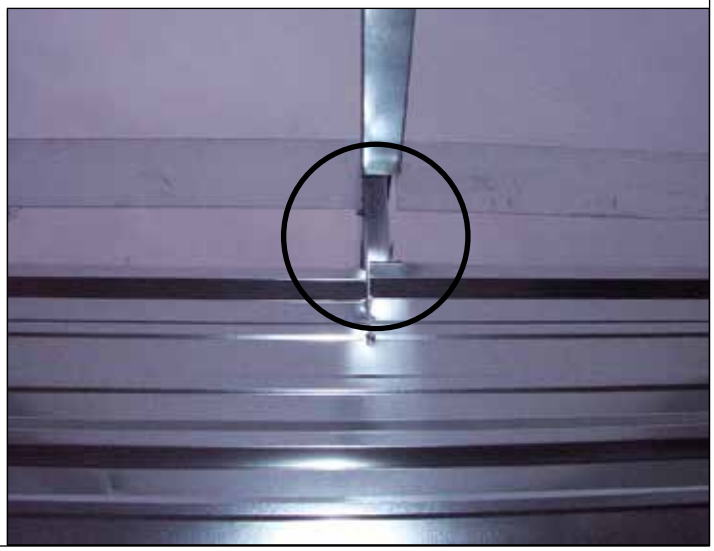

www.trachte.com

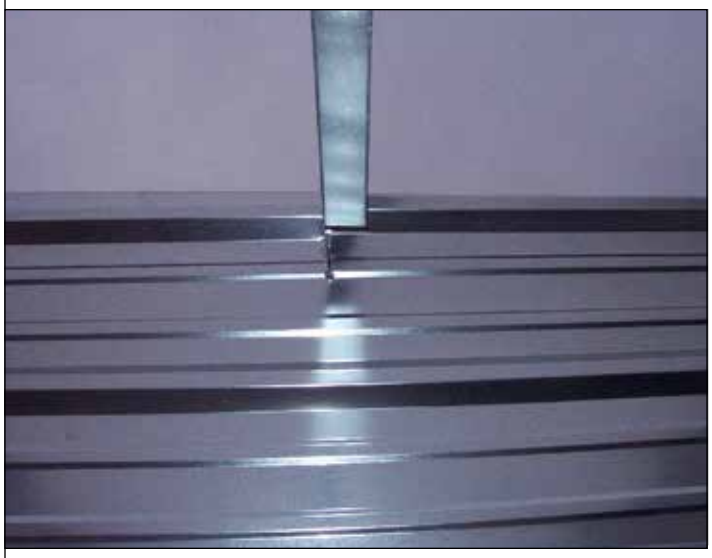

94. For an 8’4” eave height building, the last partition panel, in most instances, must be backlapped. The partition will overlap the second partition sheet by one rib, or 1’. A 9’4” eave height building will need no backlapping. See Internal partition page of your building plans for specific partition details and lengths of panels used.

95. Install the partition to the underside of the roof. **Do not fasten to the rake angle.** The partition will need to be field cut if it extends above the roof line. Refer to the internal partition page of your plans for partitioning details.

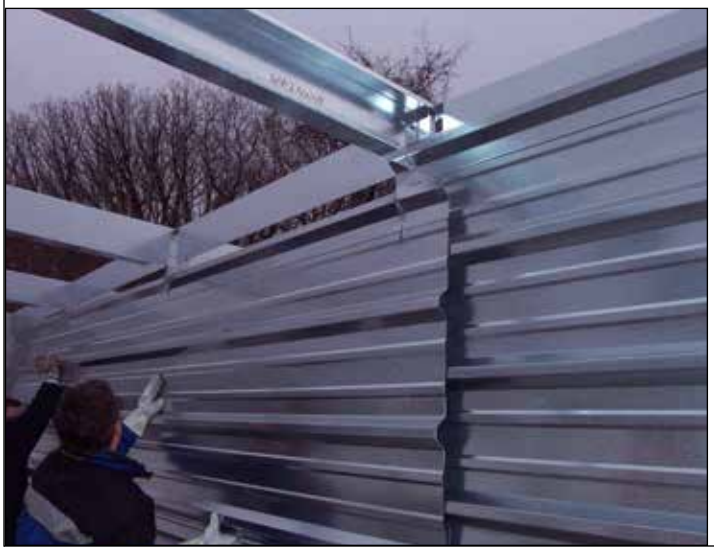

96. This photo illustrates the second section of the third partition sheet slit to clear the purlin web.

608.837.7899

97. This is a photo of a finished partition wall.

98. This is a view of the opposite side of the finished partition wall.

STEPS 99-106 INSTALL THE LONGITUDINAL SECONDARY PARTITION WALLS (RUNS THE LENGTH OF THE BUILDING).

99. Determine the location of secondary partition walls check location per plan. Cut to length the vertical channel that the partition panel fits into. Place the channel up against the purlin and mark the length you need to cut the channel. The channel cannot extend above the purlin.

www.trachte.com

100. Cut the channel to length.

101. Plumb the channel against the purlin and screw to each rib of the partition panel.

102. Install a telescoping secondary column to the purlin and anchor to the floor. The telescoping secondary column will be used in all locations that require partitioning.

608.837.7899

103. The top of the secondary column can bolt to any one of the holes in the purlin. If you have a corridor, the location of the bolt hole is critical to ensure the column is located on the correct side of the structural line. The clip shown on the purlin is for purlin bridging and is only used on some of the buildings. Refer to sheets cover page of your plans to see if any bridging is necessary.

104. Field bend the base of the column on the foundation and align on the structural line. Then, plumb and anchor using the concrete screws provided. Place two screws into the side of telescoping column to stop movement.

105. Install the first partition sheet by inserting the panel into the channel and then attaching the opposite side to the column. There should always be a vertical channel and a column to fasten the ends of the panel to.

EXCEPTION: **In a starter bay there will be two columns and no vertical channel is needed.**

106. Screw the partition to the column, then install the second panel. The top panel must be field cut to fit. **Do not backlap these.** Save remaining panel for other walls.

STEPS 107-119 INSTALL THE A-PANEL END WALL OR SIDEWALL.

107. Notch out the sill trim around the exposed bolt heads. Notch or snip a “V” around exposed bolt head.

108. Tek screw the sill trim in place at each end only. The sill trim is secured with the fasteners for the A-panel when the A-panel is installed later.

Note: Remove metal shavings or they will rust.

109. A #779600 closure is laid in place.

Note: Back tape attached to the flashing. Show foam at the top for side wall not end wall.

110. Measure the location of the girts on your assembled wall from the sill trim up. Then measure and mark the A-panels to locate the center of the girts. Pre-drilling the wall panels will assure that all wall screws will be in a straight line. **Measure twice and drill once.**

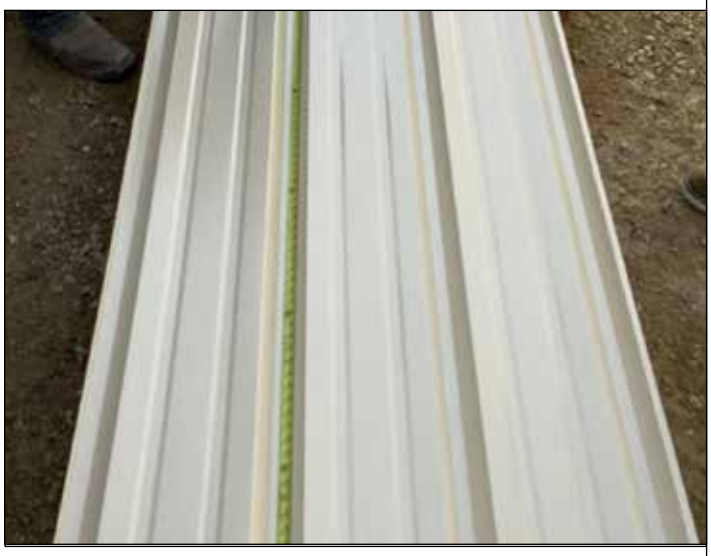

111. Place the first panel of the wall near the edge of the building. Shifting the minor ribs 2” to 3” off the structural line will assure the screws that fasten the panel to the wall structure will not hit a bolt head near column locations.

***Note for 1 degree slope: Do not make square if the building is to be a 1 degree slope.**

112. Continue to attach the sheets using the pre-drilled pilot holes.

113. The last A-panel may need to be backlapped 1' or 2'. Consider this when fastening your second to last panel. You may need to cut a few inches from your last panel so it does not run past the edge of your building. See paneling details in your drawing set.

114. This is an example of a wall A-panel ending at a sidewall starter jamb location. This will need to be finished with trim.

608.837.7899

115. Install the side wall trim to starter jamb. While holding the trim in place, drill a hole for the pop rivets at the top, bottom, and girt locations. It may be helpful to have an assistant support the trim and panel from the other side of the wall while drilling and riveting.

NOTE: **(Remember to maintain proper clearance between your hands and drill, when making holes.)**

See detail for rivet spacing.

116. Also drill and pop rivit the side wall trim to the lip of the starter jamb at the top, bottom, and girt locations.

117. Install the side wall trim at the top, center, and bottom using pop rivets. Work in one direction, bottom to top, on one surface at a time. This keeps the edges flat.

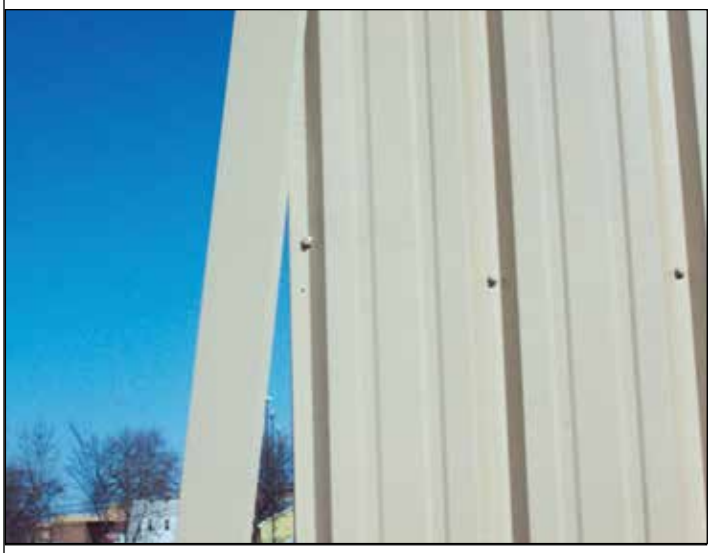

118. Cut the J-corner trim to length and fit over the A-panel. Attach using pop rivets.

119. This photo illustrates a finished A-panel endwall.

CAUTION: Immediately sweep out all steel shavings on the sill trim. Drill chips will rust and stain the building.

STEPS 120-126 DEMONSTRATE HOW TO INSTALL THE EAVE TRIM.

120. Install the blank wall eave trim over the A-panel. The blank wall eave trim is not as deep as the trim used over the door headers. The eave trim is lined up to the edge of the end wall headers. If you have A-panel on the end wall, it must be located 1-1/4" to line up with the outside of the A-panel. Notch the eave trim to fit around the corner trim.

121. At the A-panel to door frame transition, overlap the header eave trim on the A-panel eave trim and attach using Tek screws.

NOTE: The eave trim only requires minimal screws on the top. Keep these screws as close to the interior as possible. You will need a clear area at the exterior edge for installing your roof closures later. Once the roof is installed, the eave trim will be well secured.

Back screw before roofing.

122. Overlap the header eave trim on the installed eave trim.

NOTE: Eave trim has a taper.

123. This is a photo of the joint of the two pieces of the eave trim. The seam can be pop-riveted together if needed.

www.trachte.com

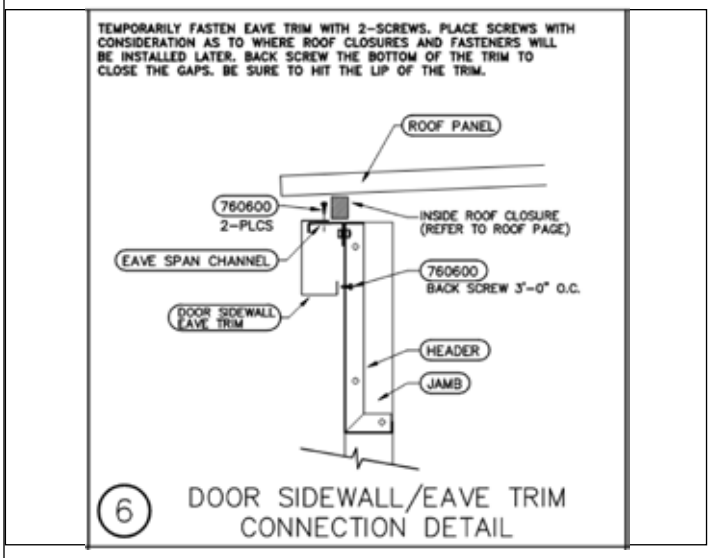

124. The eave trim can be back screwed from the backside of the header into the eave trim. **Carefully measure the distance before back screwing.** If you mis-locate this screw, you will create an unwanted hole and the screw will be visible to the exterior. The attachment must be made before the doors are installed.

125. Once all of the eave trim is on and the partition is installed, you will want to install the roll-up doors. Refer to the Trac-Rite Roll-Up Door manual located on pages 83 - 91.

126. The end wall closet will look like this once the doors are installed. The building is now ready to install the roof structure materials.

STEPS 127-140 INSTALL TRACHTE'S STANDING SEAM ROOF. REFER TO COVER PAGE ON YOUR ERECTION DRAWINGS FOR ALL THE STANDING SEAM ROOF DETAILS. IF YOU PURCHASED AN R-PANEL ROOF, REFER TO STEPS 141-172.

127. Install the rake angle that starts your standing seam roof run with the vertical leg on the structural line and the end of the angle starting at the structural line at the eave. **The vertical leg must not extend beyond the eave span channel. Install a closure that is cut in half at the eave and on the end wall structural line.** This is the common arrangement for an end wall with doors. If your end wall has A-panel, the closure will only have a small piece of the end off. Cut this closure 1 1/4" from the center line. The added material provides a surface to attach a piece of flashing to it later. **The height of the vertical leg on the rake angle is critical.** This height varies based on the amount of roof insulation your building has. Refer to your standing seam roof detail pages to see how closures are cut and the correct height of the vertical leg on your rake angle.

128. If there is a step in the building, attach a rake angle on the high and low sides.

129. Starting from the rake angle, measure and mark 2' on center on the top of the eave trim. This will provide the 2' centers for the roof closures. It is critical to have accurate 2' centers at the eave and ridge.

CAUTION: **Install all the inside closures to ensure the standing seam roof starts and stops exactly where they are supposed to BEFORE any roof panels are installed.**

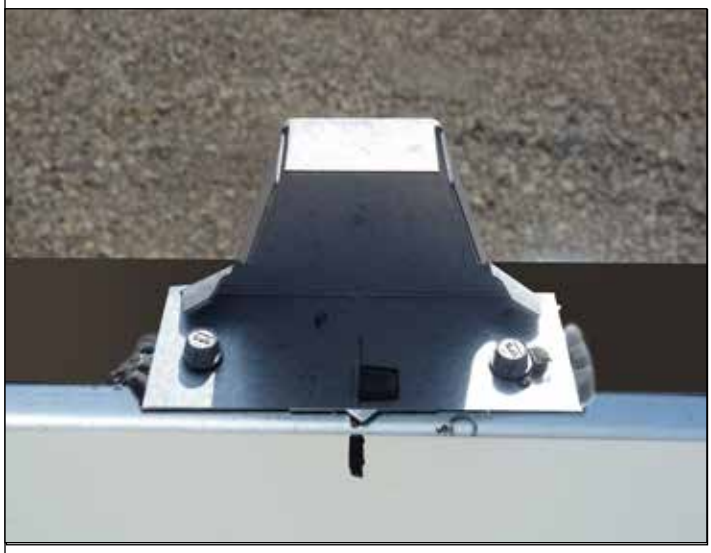

130. Cut and apply a 3” piece of #710881 tri-bead tape sealer to the bottom of the closure. Install the closure using two #710969 screws. Align the locating arrow and tab on the bottom of the closer to the 2’ center mark you made earlier. Locate all closures at least 3/16” from the outside of the eave trim.

131. Once the inside closures have been installed, apply #710881 tri-bead tape sealer down the length of the eave over the inside closure. The flat side faces up, the three beads face down. An additional square of sealant may be needed at the bottom edges of the closures to seal the gap. Measure to identify minor rib locations and cut both #710892 minor rib sealer in each location. Part# 710892 in half and place a piece at the minor rib locations (2), then place the other pieces at the corners of the inside closure.

132. To begin roofing, install one 6’ wide roll of insulation. Fold over and attach the insulation to the header using fender washers #766000 and Tek screws #760600. In this example, we are installing 3/4” thick insulation. If you have 3” or greater insulation you use a 1-1/4” Tek screw #710969.

NOTE: Do not use two-sided tape to secure the insulation.

608.837.7899

133. Lay out the first standing seam roof panel, making sure the female leg of the panel overlaps the rake angle. Measure each end of the panel to ensure the panel is centered on the building. Check for 2' at the ridge as well. This will ensure the roof does not grow or shrink anywhere.

134. Refer to sheet cover page of your plans for the correct screw pattern and sequence to attach your standing seam roof. Use a string line at the roof edge to keep all panels correctly aligned.

135. Push the standing seam roof panel over the rake angle and screw at every purlin using #760600 Tek screws (see roof details).

NOTE: Maintain a safe distance from the edge of the building.

136. Install the standing seam roof clips. There are three types of clips depending on the thickness of the insulation. The utility clip #710933 can be used with insulation up to 2”. Refer to your details page for more information. Use the 3-3/8” clip #710960, for 3” or 4” of insulation. Whichever clips are used will be screwed to the purlin using two #710969 screws.

NOTE: A roof with thicker roof insulation needs thermal blocking or spacers. See your detail page for further information. If you have issues please call customer service.

137. Snap the next panel over the existing panel by pushing firmly with foot on the seam. Start on one end and work to the other towards the other end of the panel. If you have a problem, please call customer service.

138. Install the panels following the screw pattern detailed in section G of your building plans.

139. Continue to install insulation and panel. Insulation tabs (3/4” insulation shown in photos) should be stapled (or lapped) to previously installed lengths. Refer to building plans for more specific instruction.

140. The finished standing seam roof should look like this.

NOTE: This photo has a gutter system at the eave. Less overhang is required for this application.

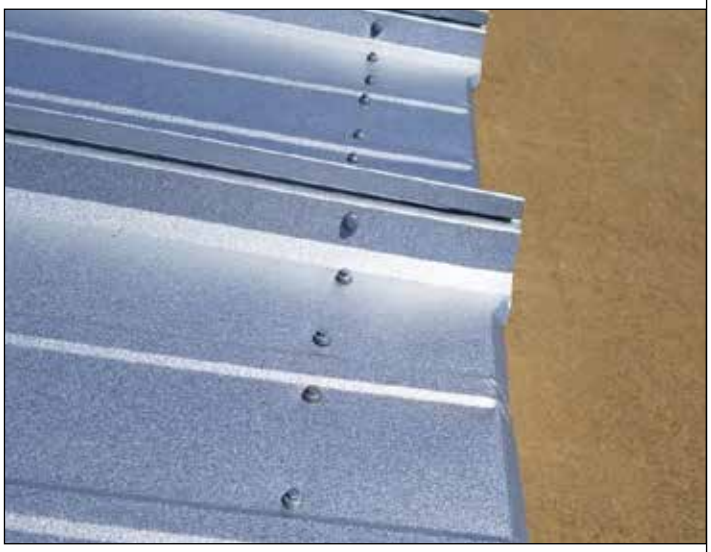

www.trachte.com

STEPS 141-172 INSTALL TRACHTE'S R-PANEL ROOF SYSTEM. IF YOU PURCHASED THE STANDING SEAM ROOF REFER TO STEPS 127-140.

141. Roll the caulk tape along the entire eave line. Install the caulk 1" from the edge of the eave trim. Then install the inside closures on the prestite caulk. Locate the center of the first closure rib on the structural line.

NOTE: Rip off the end of the first closure to start with a full rib section. Center the first rib on the end wall structural line. Mark the closures down the entire length of the building and locate ribs on 1' centers to ensure the roof panel starts and stops at the correct place.

142. Now install the caulk tape on top of the closures.

NOTE: Refer to detail #2 for more information on roof installation

143. After installing all the closures down the length of the building. The closure should end as shown with the center of the rib on the structural line.

NOTE: If the closure does not end like in this photo, re-measure and reinstall all of the closures. You must control the 1' centers.

144. Clean any oil off the purlin bearing leg of the roof sheet. The purlin bearing leg of the panel is the full rib of the panel. The non-purlin bearing leg is the other side of the panel that is a 1/2 rib (see photo 150 below).

NOTE: Pre-drill the non-purlin bearing leg every 20" down the length of the panel for the stitch screws that will be installed later.

Do pre drill body of panel, field locate purlin for screw points.

145. Install the caulk tape on top of the entire purlin bearing leg.

146. The caulk tape must be turned down 3" from the edge of the roof sheet as shown on the purlin bearing leg. If the building has a gutter, then turn it down at 1" from the edge.

NOTE: The paper backside will be removed once the lapping panel is positioned on the roof.

147. Start with one 6' wide roll of insulation. The roof sheet is 3' wide so 3' of the insulation will lap out. This makes it easy to staple the next roll of insulation to the first piece of insulation. Roll the insulation out and attach to both ends at the eave using a #760600 Tek screw and #766000 fender washer. At the header, flange on or top track.

NOTE: Do not use two-sided tape to secure the insulation.

Pull insulation tight to avoid sagging and create a clean appearance from the inside.

148. Raise the first roof sheet onto the roof. Center it on the building to assure a uniform overhang (Refer to image 154 to show uniform overhang).

NOTE: Follow all OSHA procedures; maintain proper distance from edge of the building.

149. Screw the roof panel into place. The screw pattern at the eave is different than at each purlin. Refer to cover page of your plans to locate roof information.

NOTE: Make sure to follow the roof screw pattern to attach the R-panel properly. Refer to the fastening details on your erection drawings.

608.837.7899

150. Start with the non-purlin bearing leg of the roof sheet at the structure line of the end wall.

NOTE: The eave trim is notched around the corner trim.

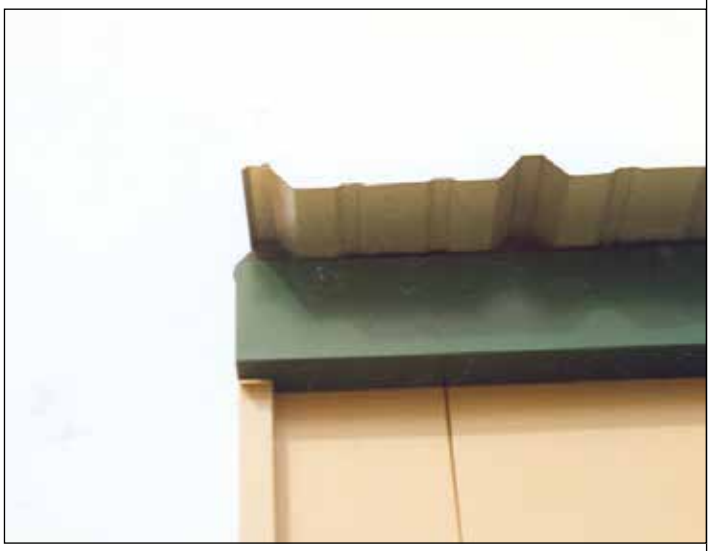

151. Attach the roof sheets to the eave using the EDPM self-tapping screws.

152. The eave screws are installed drilled through the inside foam closure and the tape caulk at eave trim outside the building envelope.

NOTE: See photos 163 and 164.

153. Each of the rolls of insulation will now be 6' wide.

154. Fasten the insulation using #760600 Tek screws and #766000 fender washers. Make sure to pull the insulation tight to avoid sagging and achieve a nice appearance when viewed from inside the building.

155. Staple the insulation tabs together. If you overlap the tabs, you do not have to staple them.

156. Lift each piece of roofing into place. The non-purlin bearing leg is always laid on top of the purlin bearing leg. The panels are stitched together utilizing the 7/8" EDPM self-tapping screws.

NOTE: Check to make sure the panels stay on the 1' marks so the roof does not grow or shrink in width.

157. The roof panel easily bends over the ridge. The R-panel roof can bend over the peak for a roof pitch, up to 1/2"-12".

NOTE: Be sure to maintain proper overhang.

158. Place the roof sheets on the roof either by hand or by utilizing a Lull truck. Long sheet bundles are susceptible to buckle. Be sure all precautions are taken to ensure none of the panels buckle. Before lifting the pallet of roof sheets, make sure you orient the purlin bearing legs in the correct direction (see notes 154 and 152). Please remove cribbing before lifting panels.

WARNING: DO NOT pile a large number of roof sheets in one spot. This may cause structural damage due to excess loading. It is recommended to stage roof panels on structure line. It is recommended to stage roof panels on structure line.

159. The Tek screw pattern looks like this. At the eave there are three screws per foot at the eave. There is one screw per foot at each purlin. The overlap of the panels utilize a stitch screw every 20” on center. Refer to fastening details on page 15.

160. To make sure you do not damage any panels, always stand on the flat part of the panel. Do not stand on any ribs because they will buckle.

Note: Follow all OSHA procedures; maintain proper distance from edge of the building.

161. Screw the roof into each purlin in 1’ increments. Use a chalk line to make sure you do not miss a purlin.

NOTE: If you miss a purlin, please take out the roof screw and replace with one of the goof screws that are provided or strip out a screw.

NOTE: Maintain a safe distance from the edge of the building.

608.837.7899

162. The roof closures, insulation, and roof panels look like this.

163. This is a photo of a finished roof sheet for a building without gutter. Buildings with gutters will have less overhang than this. Correct over hang 1 ½" for gutter and 4" to 6" for no gutter.

164. Not all building lengths are divisible in 3' increments. In this instance, the buildings need to have the last roof sheet cut to correctly lap the panel. Apply caulk tape, as shown, to seal the overlapped roof panel.

165. Install the last roof panel to close the remaining distance, cut this panel so there is no back lap.

166. **Do not** back tap the panel as shown. This will rust out the roof faster than cutting the panel.

167. The last roof sheet panel must end on a high rib to properly seal the end of the roof. The last rib must have a line of caulk tape on the rib to seal the rake trim.

168. If the building is over 40' wide, Trachte supplies a two-piece roof sheeting system. Refer to your specific building listing to see if you have a two-piece roofing system. The screw pattern will be on the roofing details part of your plans.

STEPS 169-178 INSTALL THE RAKE TRIM AND PEAK BOX.

169. Before installing rake trim on a building with a standing seam roof, you must install tape caulk on the vertical leg of the first and last standing seam roof panels.

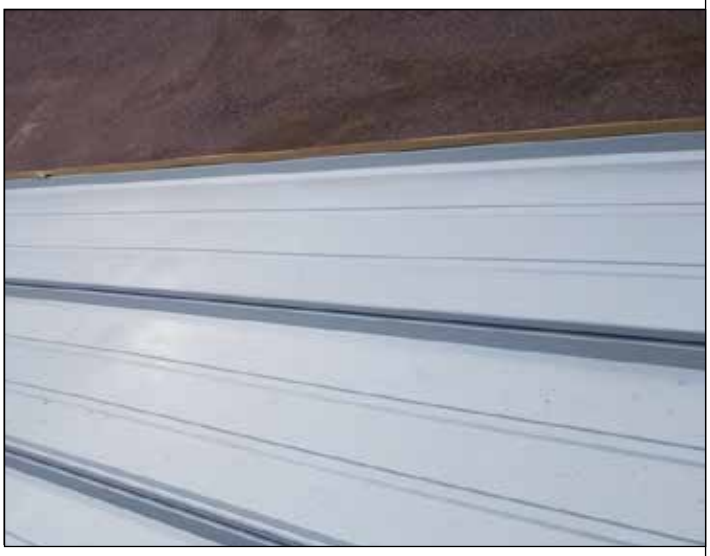

170. Install the rake adapter trim over the edge of the standing seam roof. Screw the trim to the rake angle using Tek screws roof screws every 6" to 9".

171. The adaptor trim is located on the structural line of the end walls. Do not extend the ends of this part beyond the structural line of the sidewall. It does not install flush with the ends or overhang on the roof sheeting. This will allow the end caps of the rake trim to fit with minimum or no field cutting.

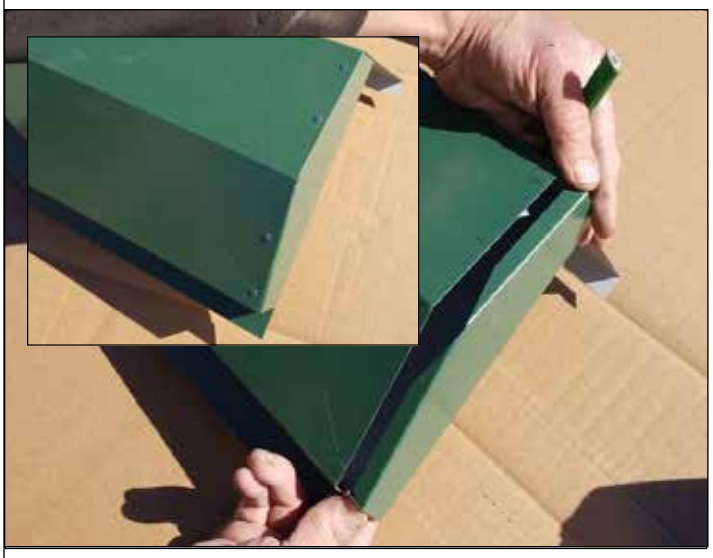

172. Before you install the rake trim, attach the rake trim end cap to the end of the rake trim. Hold the end cap in place and then drill to install colored pop rivets.

NOTE: May need to notch end cap if it impacts the trim.

173. Lay the rake trim on top of the adapter trim and screw into place using stitch screws every 12” down the entire length of the panel. The end of the rake trim lines up with the edge of the roof sheet.

174. Install an inside closure between the rake trim and the A-panel. Use presstite caulk to hold it in place and attach with colored Tek screws through the closure at 12” center minimum.

175. On an R-panel roof, the top flange of the rake trim is screwed to the high rib of the roof panel using colored 7/8” EDPM self tapping screws. Refer to detail. The screws should go through the tri bead tape.

176. Line the rake trim up with the edge of the roof sheet. The bottom flange of the rake trim can be trimmed back to the point where it is flush with the corner trim. Attach the rake trim to the A-panel using painted Tek screws that match the color of the rake trim.

177. If the rake trim is going on a wall that has end closets, the rake trim must be notched around the J-corner trim. This rake trim is on an R-panel roof.

178. Install the peak box over the peak of the roof.

608.837.7899

STEPS 179-197 INSTALL GUTTERS AND DOWNSPOUTS (IF APPLICABLE).

179. Install a bead of silicone caulk on the entire under side edge of the roof panel (R-panel or standing seam) to prevent water from running up the panel to the closures and staining the building. In lieu of the caulk, seaming pliers can be used to create a small lip on the roof panels to create a drip edge (see gutter pages in your drawing set).

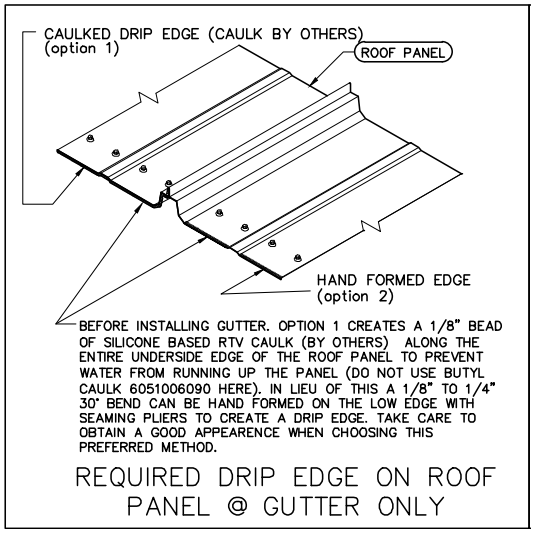

* This shows how make a drip ledge on a standing seam roof. Photo below shows the panel being bent down to cerate a drip ledge.

* This shows how make a drip ledge on a R-panel roof.

180. Attach standing seam gutter hangers to vertical leg on every panel using 7/8” EDPM self tapping screws. String line or measure hangers so that the gutters are straight.

NOTE: May need to notch end cap if it impacts the trim.

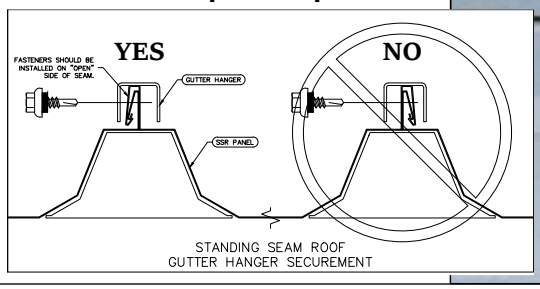

181. Notch the gutter end cap so it can fit around the gutter tab.

182. Drill and pop rivet to the gutter end cap to the end of the first gutter.

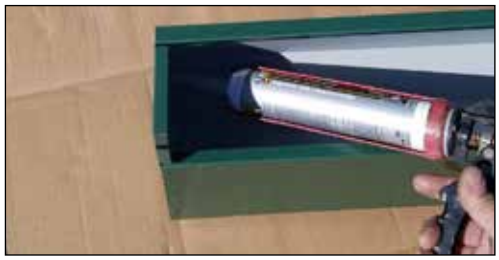

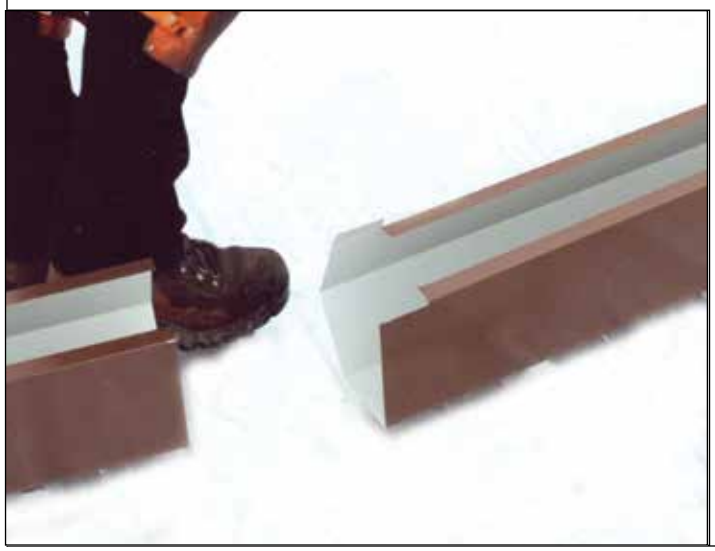

183. When installing the second piece of gutter, notch one side to allow the gutters to nest together as shown.

184. Caulk the joint before nesting the two gutters together. **Use the caulk for this.** Do not use the silicone caulk on gutters.

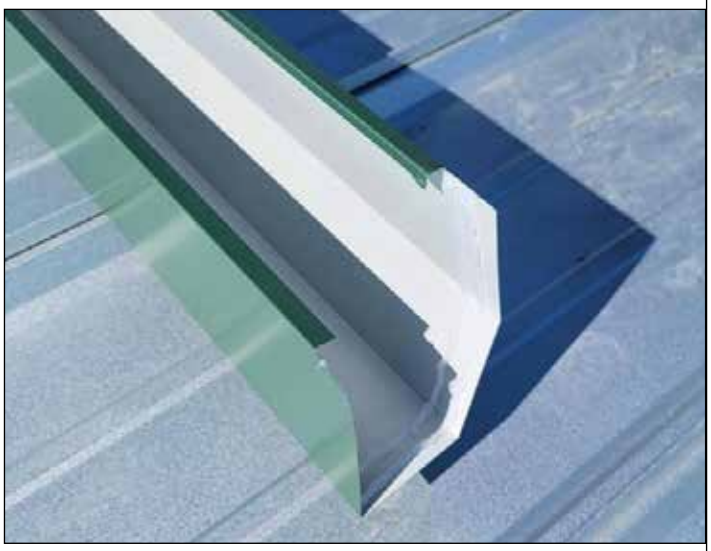

185. Drill and pop rivet the joint.

186. Add another layer of caulk on the inside seam. Make sure to smooth it out so it does not hold back any water.

187. Butt the gutter to the rake trim. The end of the rake trim should line up with the outside edge of the gutter.

188. To install gutters on a R-panel roof a string line is run at the rear location of the gutter strap. This ensures that the front edge of the gutter will be straight. Attach the gutter hangers for the R-panel roof using two 7/8" long stitch screws. Install a gutter strap every 2' down the length of the building.

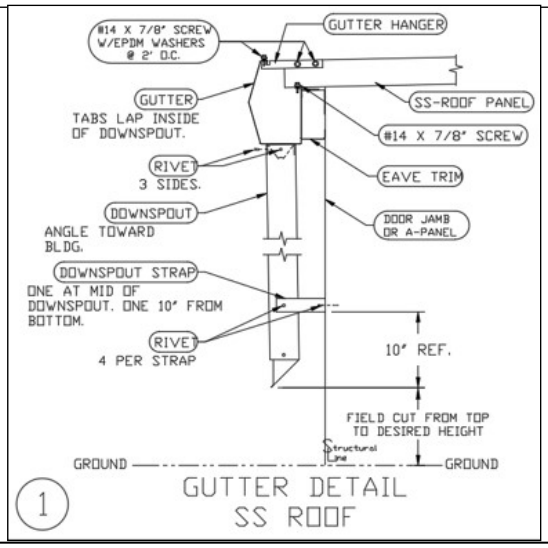

189. Here is the detail for the downspout installation. It is important to verify the locations of these downspouts. **The Trachte plans will specify the standard locations for these downspouts but they may interfere with your planned locations for your exterior lights and possible camera locations. Please verify all of these before you cut your first hole.**

Note: Refer to the Trachte plans for downspout placement.

608.837.7899

190. The gutter must be cut out for the downspout. Field cut an “X” at the downspout location and bend the tabs down.

191. The downspout must slide over the four tabs on the gutter. Drill and pop rivet the downspouts on three sides through the tabs.

192. Screw the downspout strap to the side of the building using 7/8” stitch screws with EDPM washer. Then drill and pop rivet the strap to the downspout.

NOTE: Do not allow the straps to extend beyond the downspout as shown. Cut straps if necessary.

193. The downspouts are typically installed to end just above the concrete. If the downspout must go into an underwater drainage you need to specify extended downspouts. In cold climates an alternative is to cut the downspouts short so they don't interfere with the snow plowing on your site,

194. The gutter should look like this at a step transition.

NOTE: The eave trim must be mitered around the step before the gutter is installed.

608.837.7899

STEPS 195-202 INSTALL A STEP IN THE ROOF (IF APPLICABLE).

195. If your building has a step, the purlin has to be field located. The purlin should be level and then Tek screwed to the column. (This distance should be the same as your step size.)

196. The roof panels should line up with the step as shown. The trim pieces are then installed.

197. If you have chosen to have a rolling step, follow the roof framing page of your drawing to verify which purlins are used. Field locate the purlin on the column.

198. A special header is used and the trim follows the slope as shown.

199. Here is a view of the inside of the unit looking out.

200. Here is a view of the finished unit.

201. Congratulations on completing your Trachte building!

202. Door numbers are typically installed by the owner in the center of each door header or on the door jamb.

* The problem with installing on the door jamb is that if the jamb needs to be replaced you will also need a new number.

944
SELF-STORAGE/RESIDENTIAL

ROLLING CURTAIN DOOR INSTALLATION, MAINTENANCE & PARTS MANUAL

ROLL UP DOORS

PERFORMANCE • VALUE • SERVICE

MODEL 944 & 944WL

⚠ WARNING

Read manual thoroughly prior to installing door. Rolling steel doors are large, heavy objects that move with the help of springs under extreme tension. Since moving objects and springs under tension can cause injuries, your safety and the safety of others depends on you reading and following the information in this manual. Check your work prior to operating door.

POTENTIAL HAZARD	EFFECT	PREVENTION
MOVING DOOR	Can Cause Serious Injury or Death	Keep people clear of opening while door is moving. Get help or use support when lifting new door into place.
EXTREME SPRING TENSION	Can Cause Serious Injury or Death	Installation, repairs, and adjustments must be made by a qualified door mechanic using proper tools, methods, and instructions. Before winding torsion spring, make sure door is fully open and curtain is wrapped on barrel.

NOTE!

DO NOT CUT BANDS which hold door in a roll. You will be informed when to cut bands within this manual. No guarantee will be given or responsibility accepted by Trac-Rite Door, Inc. if door is not installed as instructed. For proper operation, follow instructions given.

⚠ WARNING

Components under extreme spring tension can cause SERIOUS INJURY or DEATH. Adjustments and repairs must be made by a qualified door mechanic using proper tools and instructions. Do NOT attempt to adjust door tension unless the door is in the “UP” position. Winding bar should be solid steel 1/2” diameter rod or 3/8” x 1/2” flat.

⚠ CAUTION

Use proper lifting equipment and correct lifting procedures to avoid injury.

⚠ CAUTION

If door springs are not adjusted properly, door damage can result. Door should not slam up or down.

PHONE 608 837 8895
FAX 800 236 8722
WEBSITE www.tracrite.com
EMAIL tr@tracrite.com
ADDRESS 314 Wilburn Road
Sun Prairie, WI 53590

Trac-Rite
A TBS COMPANY

Proprietary Notice

Information contained in this document is copyrighted by Trac-Rite and may not be duplicated in full or part by any person without prior written approval of Trac-Rite. Its purpose is to provide the user with adequate detailed documentation to efficiently install a model 944 rolling curtain door.

For Customer Support regarding:

Parts orders
Technical help
Emergency support
Installation questions
Damage
Shortages

Please Call: 608-837-8895

NOTE!

DO NOT CUT BANDS which hold door in a roll until instructed to do so. Trac-Rite will not guarantee or accept responsibility if door is not installed as instructed.

1. INSPECTION:

Door and Hardware: Upon receiving the door shipment, immediately inspect the door and hardware for damage. Verify the product received with the packing list. Damage and/or shortages should be reported immediately to Trac-Rite customer service at 800-448-8979. Please have your bill of lading and packing list to reference when reporting shortages or damage. Do not install damaged material without authorization from Trac-Rite.

Door Opening Inspection (See Figure 1):

- Is the framed opening width and height the same size as the door ordered? (A x B)
- Are the door jambs plumb and square?
- Is the floor level and square with the door jambs?
- Is there adequate jamb side clearance? (E)
- Is there adequate clearance above the door curtain roll? (G)
- Is there adequate clearance in front of the roll? (F)
- Are the jambs structurally and/or dimensionally adequate to accept door brackets and guides?

2. PREPARATION:

Clean the work area. Remove all debris and sharp objects from the area where the door will be placed on the floor. Sweep the area clean. It is also recommended that the door curtain assembly be placed on a piece of cloth or cardboard to help ensure that the finished door surfaces will not be damaged while the door is being prepared for installation.

Recommended tools for assembly:

- Wrenches or sockets 7/16” and 1/2” sizes
- Drill or screw gun
- 3/8” and 7/16” hex drivers (wood mounting)
- 5/16” hex driver and 3/8” drill bit (steel mounting)
- 5/16” and 7/16” hex drivers and 5/16” masonry bit (concrete or masonry mounting)
- C-clamps or vise grips
- Safety glasses
- Work gloves
- Pliers

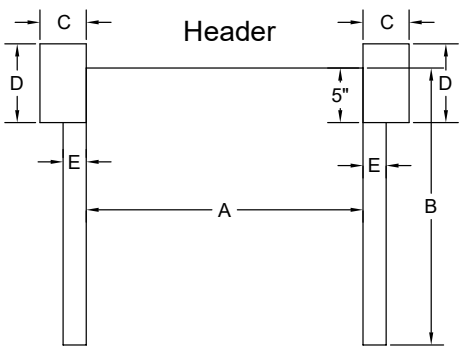

A - FRAMED OPENING WIDTH
B - FRAMED OPENING HEIGHT
C - MINIMUM BRACKET MOUNTING WIDTH:
4"[10cm] FOR METAL OR WOOD;
5" [12.7cm] FOR WL
D - MINIMUM BRACKET MOUNTING:
7-1/2"[19cm]
E - MINIMUM JAMB WIDTH:
2"[5cm]
3"[7.6cm] FOR WL
F - BACK ROOM:
18"[46cm]*
G - HEAD ROOM:
15"[38cm]*
16"[41cm]* DOORS 7'1" AND HIGHER
H - SIDE ROOM:
4"[10cm] ;
5"[12.7cm] FOR WL
(9"[23cm] ON A SIDE WITH A CHAIN HOIST)
* ADD 1"[25mm] FOR INSULATED DOORS

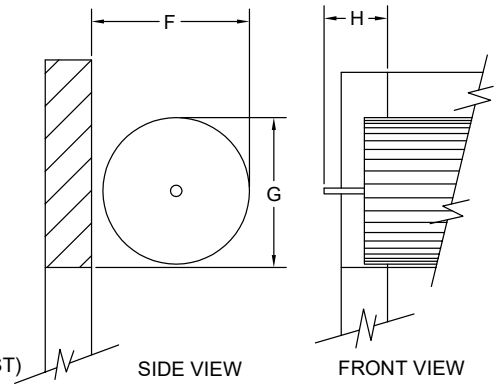

Figure 1

3. BRACKET AND GUIDE ASSEMBLY

3.1 Position the guides and brackets inside the building on the floor near their mounting location.

3.2 Place the guides on the ground with the mounting holes facing the ground and the bent curtain lead-in up and toward the door opening (See Figure 2 for example of right hand guide).

3.3 Now place each bracket with the correct guide. Each bracket is labeled left or right *(See Figure 1A).*

3.4 Attach a bracket to each guide with one (1) 5/16" flat head track bolt and one (1) whiz-nut as shown in Figure 2. Nuts go to outside of guide. Make sure the back of the bracket and guide are flush when done mounting both brackets *(See Figure 4)*.

3.5 Place a protective material on the floor of the work area to protect door nest while on the floor.

3.6 With enough room between the guides for the door nest, bring the nest in and lay it between the guides on the floor. Orient the door nest in the opening as shown in *Figure 3*.

3.7 Slide the door bracket over the door axle, through the bearing. If needed, rotate the tension wheel to allow the adjustment wheel to slide past the tension adjustment pawl.

3.8 Install a steel washer onto the axle and secure with cotter pin through axle's hole. If the washer blocks the cotter pin hole, don't use the washer.

3.9 Using pliers, bend both ends of the cotter pin back to secure it.

Repeat steps 3.7 - 3.9 for other side of door.

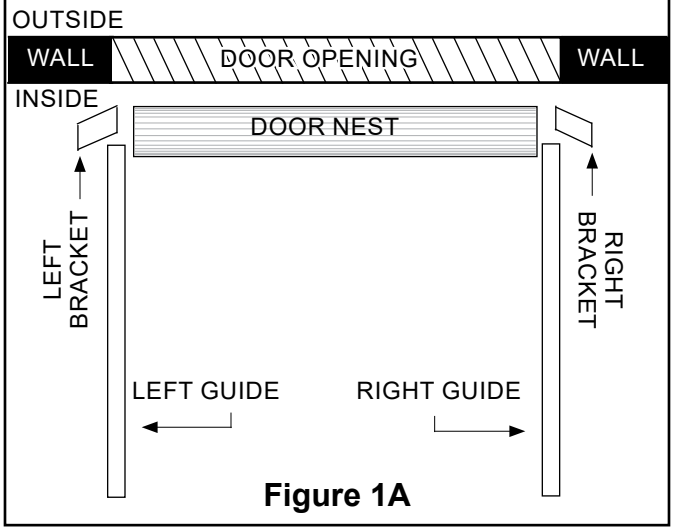

Figure 1A

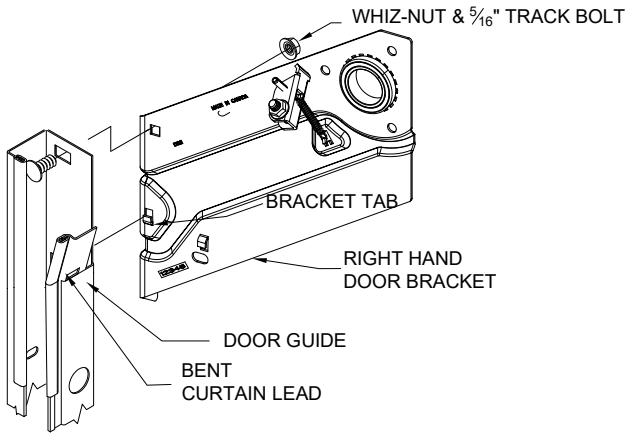

Figure 2

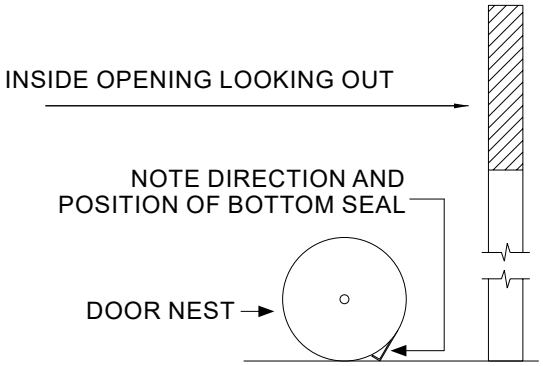

Figure 3

www.tracrite.com

⚠ CAUTION

Use proper lifting equipment and correct lifting procedures to avoid injury.

NOTE!

DO NOT LIFT BY THE GUIDES! They will bend and become unusable. For larger doors, a third person or lifting equipment may be required.

4. Door Mounting

4.1 With one person on each end of the door nest, lift it and the attached brackets/guides into position.

4.2 Temporarily secure door assembly to jamb with C-clamps, vise grips, or bar clamps.

4.3 Center the door in the opening with the door brackets perpendicular to the mounting surface.

NOTE!

The door brackets will flare away from the opening to allow for the use of the tension system.

Steel jambs

4.4s Position the door assembly in the opening as shown in Figure 4, and drill a 3/8" hole in the jamb to match up with the upper hole in the bracket if one is not there already.

4.5s Using the supplied rounded head 5/16" carriage bolts, attach both door brackets to jambs. Drive a tek screw into the lowest small hole through the bracket and into the jamb.

4.6s If drilling a hole in the jamb is not possible, replace the supplied 5/16" carriage bolt with two additional tek screws in the small holes in the bracket.

Wood/masonry jambs

4.4w Drill through both slots. Hole sizes for masonry or wood may vary, depending on the type of fastener required. Verify the fastener size before drilling *(See Figure 4).*

4.5w Using the supplied hardware, bolt both door brackets to jambs. Use two (2) fasteners appropriate for your jamb construction.

4.6 After both door brackets are secured to the jambs, remove temporary clamping devices.

ALTERNATIVE FASTENERS

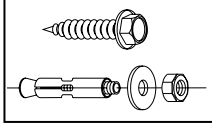

2) WOOD FASTENERS PER BRACKET
5/16" X 1 5/8" LAG BOLT (P/N 502860)

2) MASONRY ANCHORS PER BRACKET
5/16" X 1 1/2" ANCHOR (P/N 508330)

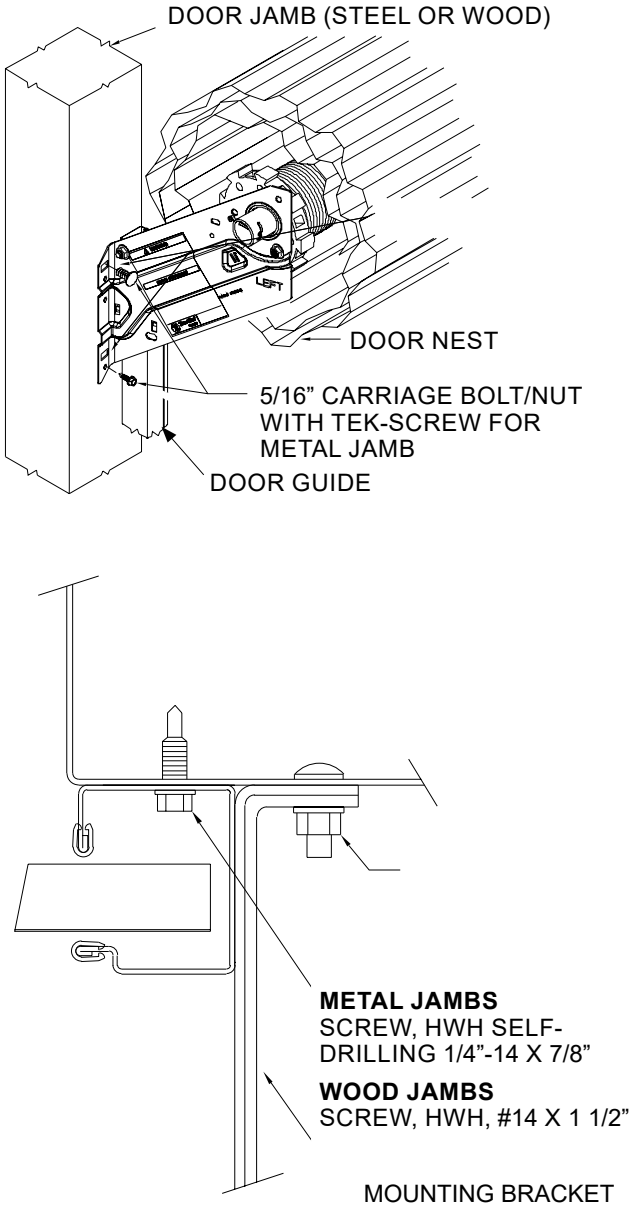

Figure 4

608-837-8895

NOTE!

When installing multiple doors of the same size, confirm the first door is operates correctly and is properly tensioned and apply the same tensioning method to all doors.

⚠ WARNING

Care must be taken to secure door so it does not spin around free, as this may cause personal injuries and damage to door curtain. Door is free to spin until door stops and keepers are installed.

5. DOOR TENSIONING:

5.1 Determine the proper number of nest rotations needed to tension the door, based on the door size (See Figure 5). Rotate the nest towards the door opening the appropriate number of turns to tension the system *(See Figure 6).*

5.2 Hold the door tightly to prevent unwinding. Remove the stretch wrap and cardboard strips wrapped around the door curtain and discard.

HEIGHT

WIDTH	up to:	7' 4"	12' 0"
	3' 0"	3	
	3' 11"		
	4' 6"		
	5' 0"	4	
	5' 1"	2	
	7' 11"		
	8' 0"	3	3
	9' 0"		
	10' 0"	2	
	11' 0"		
	12 0"		

Spring Tension (Number of turns)

Figure 5

NOTE!

DO NOT REMOVE WHITE FELT TAPE on the inside of the door curtain. It is a door component, NOT packing material.

5.3 Guide the door curtain carefully into the door guides and pull it down to approximately waist level.

5.4 Hold the door in position until the door stops and keepers are installed.

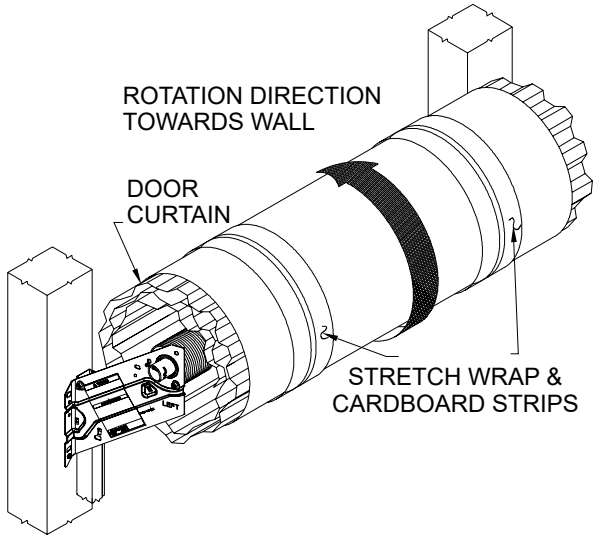

Figure 6

www.tracrite.com

⚠ WARNING

Immediately install keepers and door stops. These devices will prevent the door from rolling up out of the guides and possibly causing injury.

6. KEEPER AND TOP STOP ASSEMBLY

6.1 Remove whiz nut from each side of door bottom bar *(See Figure 7)*.

6.2 Attach one keeper to the bottom interior edge of each side of the door with one (1) 1/4” carriage bolt and whiz nut. *(See Figure 7).*) *(See Figure 10).*

6.3 Tighten whiz nuts to fasten keepers.

6.4 Slide the stops up into position so that the hook tab mates with the upper hole on the stop (See Figure 7). Fasten each door stop to each bracket as shown using one (1) 5/16” track bolt and nut through the lower hole of the stop.

⚠ CAUTION

Excessive force in operation may cause damage to the door. If the door binds, adjust guides to allow appropriate movement.

7. SECURING THE GUIDES

7.1 Pull the door down to within 6” of the floor *(See Figure 8).* Adjust the door guides so there is 1/8” to 1/4” of play side to side. If the clearance is too small the door will be hard to operate. Too much clearance will allow the door to move side to side excessively and may cause the door to bind.

7.2 Attach the guides to the jambs as follows:

7.2a For steel jambs, secure with supplied Tek screws, using one fastener per mounting hole.

7.2b For wood jambs, secure with supplied lug bolts, using one fastener per mounting hole.

7.3c For masonary jambs, secure with supplied tapcon screws, using one fastener per mounting hole.

7.3d (FOR WINDLOCK MODEL ONLY) Install the transition clip (P/N 527410) to ensure smooth operation of the wind locks from the door nest to the guides. Slide the clip behind the bent lead in on the guide. Fasten the clip to the door bracket with a Tek screw to hold the clip in place.

DOOR AXLE ASSEMBLY NOT SHOWN FOR CLARITY

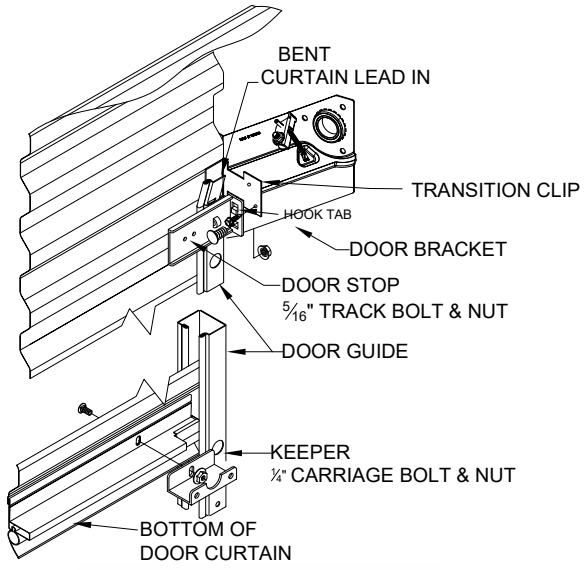

Figure 7

NOTE!

Optional masonary clips available from Trac-Rite.

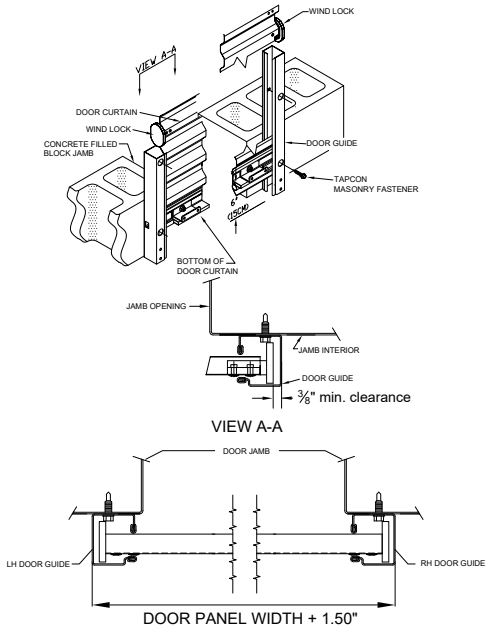

Figure 7 Windlock Door

608-837-8895

8. FINAL ASSEMBLY

8.1 Pull rope handle: Tie a knot in one end of the rope. Slide the plastic handle onto the rope and pull the knot up into the handle. Pass the other end of the rope through the hole in the center of the bottom edge of the door and tie another knot in the end to keep the rope from pulling through *(See Figure 9).*

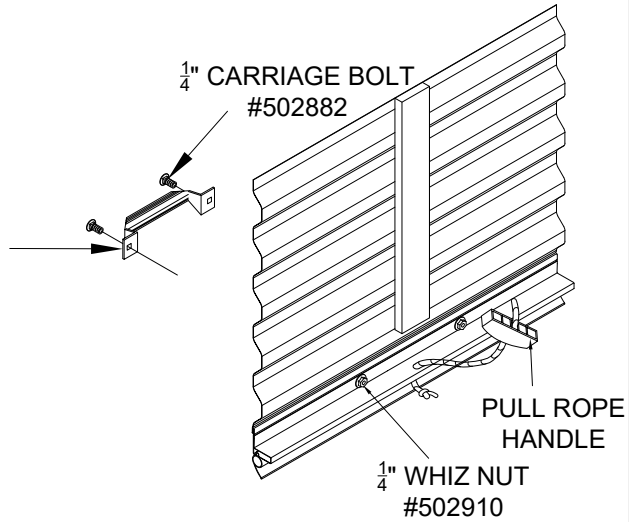

Figure 9

8.2 Exterior handle: Attach the handle(s) to the bottom exterior edge of the door with two (2) 1/4” carriage bolts and whiz nuts provided *(See Figure 10).* Doors 6’ wide and larger will have two handles.

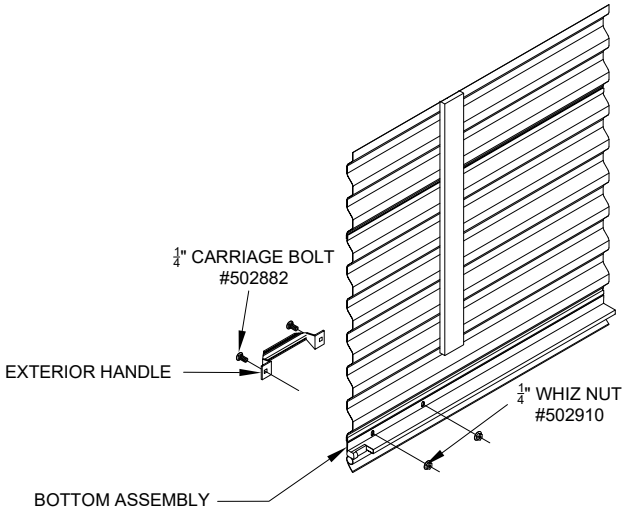

Figure 10

8.3 Attach the guide warning label *(See Figure 11)* to wall next to the guide at eye level. If mounting to an unfinished surface such as bare masonry or wood, attach the label to a nonporous surface and use mechanical fasteners to mount on wall.

www.tracrite.com

9. OPERATORS:

Operators can be installed on either side of door, prior to or after the door is hung (although there may be clearance limitations).

9.1 Shaft Extension Installation

9.1.1 Every door will require a shaft extension to attach the operator of your choice.

9.1.2 Slide the shaft extension into the end of the axle pipe and line up holes in the axle and the shaft extension. Make sure the keyway on the shaft extension is sticking out of the door axle.

9.1.3 Secure the shaft extension to the axle using the supplied ¼" shoulder bolt and nylon insert stop nut.

9.2 Direct – Drive operator (Figure 12)

9.2.1 Slide one shaft collar onto the shaft extension and secure set screw into the keyway.

9.2.2 Slide the pocket wheel onto the shaft extension until it rests against the shaft collar, then install the ¼" square key to line up the shaft extension and the pocket wheel. Install and tighten set screws.

9.2.3 Slide remaining shaft collar onto the shaft extension until it rests against the pocket wheel assembly. Secure with set screw into the keyway.

9.2.4 Feed hand chain through and around pocket wheel. Make sure the chain is not laying on the ground and free of twists before closing the chain.

9.3 Reduced-drive operator (Figure 13)

9.3.1 Secure the chain hoist body with a shaft collar on each side and tighten set screws into the keyway.

9.3.2 Install the 41B36 sprocket on the shaft using the ¼" square key. Make sure this sprocket lines up with the sprocket on the chain hoist. Install and tighten set screws.

9.3.3 Attach wall "L" bracket to main hoist body using either supplied self-tapping screw or bolt and nut supplied using an existing hole in the case. This will hold the hoist level and keep it from swinging during operation. Secure "L" bracket to wall.

9.3.4 Feed hand chain through and around pocket wheel. Make sure the chain is not laying on the ground and free of twists before closing the chain.

9.3.5 Install the roller chain around sprockets using the master link provided.

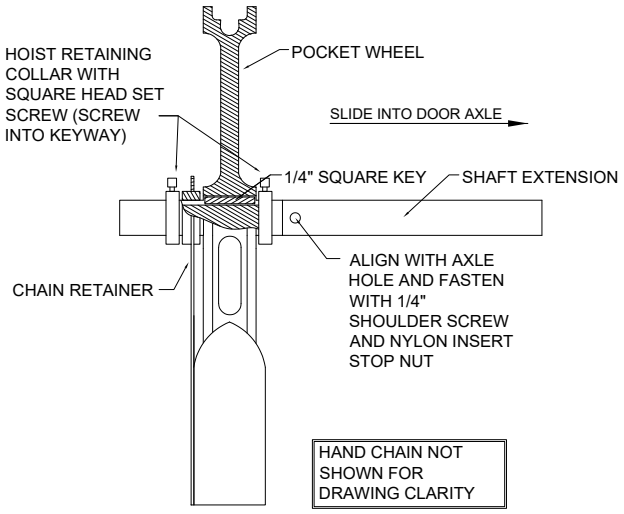

Figure 12

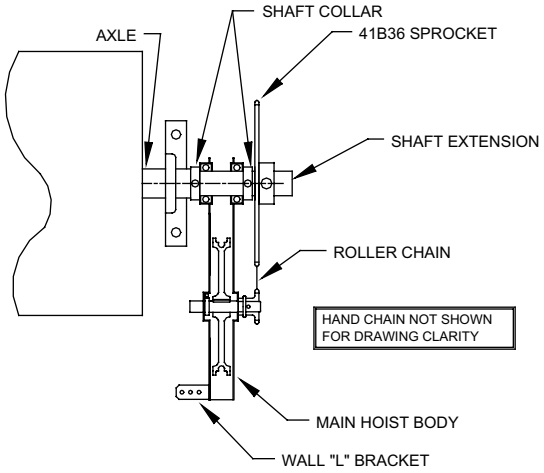

Figure 13

9.4 Final Assembly

9.4.1 Bottom Weight – For best performance install the backup angle supplied by removing nuts and bolts from the bottom bar and then replace once angle is in place.

9.4.2 Attach chain keeper clip to wall (4' to 5' above floor).

⚠ WARNING

Components under extreme spring tension can cause SERIOUS INJURY or DEATH. Adjustments and repairs must be made by a qualified door mechanic using proper tools and instructions. Do NOT attempt to adjust door tension unless the door is in the "UP" position. Winding bar should be solid steel 1/2" diameter rod or 3/8" x 1/2" flat.

10. ADJUSTING DOOR SPRING TENSION

10.1 A properly tensioned door should be balanced (does not fall closed or spring open) when opened to waist level. Step on the handle to close door fully.

10.2 To add tension, insert winding bar in the rectangular hole in the tension wheel and pull down until ratchet clicks. Move up slightly until ratchet locks in place (See Figure 14). If more tension is needed, move winding bar to the next hole in the tension wheel and repeat as necessary.

10.3 To remove tension, insert winding bar into tension wheel and move down 1" to unlock ratchet. Push the tension lock pin toward wall and raise winding bar 2". Release tension lock pin. Move up 1/8 turn until the ratchet locks in place.

10.4 If door has two tensioners be sure to equally add or remove tension to each side of door.

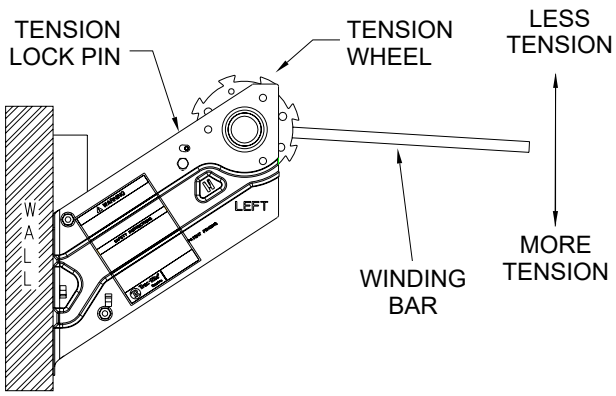

Figure 14

⚠ CAUTION

Spring Tension is Critical: Improper tensioning of the spring(s) can result in door damage and reduce the life of your door. The door should not slam up or down during operation. No warranty claims will be honored due to damage caused by improperly tensioned spring(s).

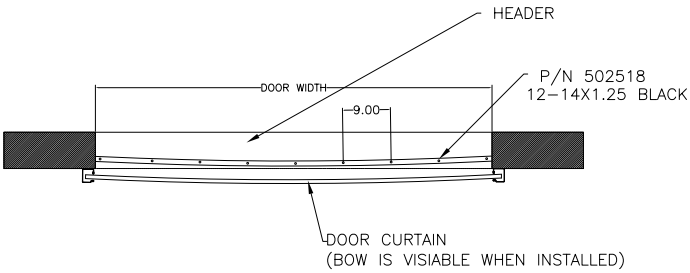

Figure 15

11. OPTIONAL FIELD INSTALLED DRAFT STOP OR BRUSH SEAL

11.1 Close the door before installing the draft stop. Note that with the door down, the curtain may "bow" slightly near the top; this bowing is normal. For the draft stop to be effective, it should follow the "bow" in the door curtain so that it stays in contact across the entire width of the door curtain. Starting at one end, attach to header every 9" with appropriate fasteners. If necessary, trim excess at other end. See Figure 15.

11.2 Close the door before installing the brush seal. Position brush seal so it just touches the flat portion of the inside of the curtain (See Figure 16). Fasten brush seal to jamb every 12" with appropriate fasteners.

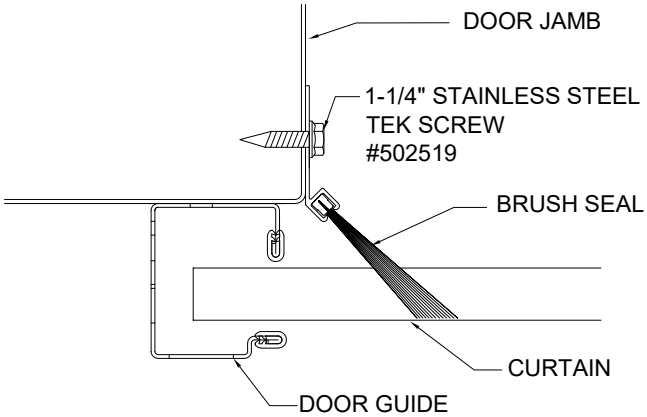

Figure 16

12. OPTIONAL INTERIOR LOCK INSTALLATION
12.1 Position door at waist level.

12.2 Assemble components as shown in Figure 17, noting that two (2) high collar lock washers are placed over each 1/4” one-way screw to allow the lock bar to slide freely.

12.3 As the 1/4” screws are being tightened, move the lock bar to assure that the high collar lock washers are inside the slots in the lock bar.

13. MAINTENANCE INSPECTION:
Visually inspect the entire door monthly for general cleanliness and ease of operation.

- Inspect the guides and curtain for wear and/or accidental damage.
- Inspect all fasteners and anchor bolts for loose, damaged, or missing parts.
- If door is equipped with a chain hoist mechanism, inspect it for missing or loose parts.

Cleaning: No specific cleaning procedures are absolutely required. Clean all parts of the door and guides as needed.

LUBRICATION: Lubricate the following every six months. When operating in dusty or wet environments lubrication may be required more often.

- Guides: Open the door. Spray silicone spray or Zep 45™ onto the door guide runners and inside the guide.
- Latch: Spray the slide latch with silicone spray to promote smooth latch operation.
- Chain Hoist Parts: Apply a small amount of oil to roller chain.
- Spring: To ease friction and prevent squeaking apply silicone spray or Zep 45™ across the spring.

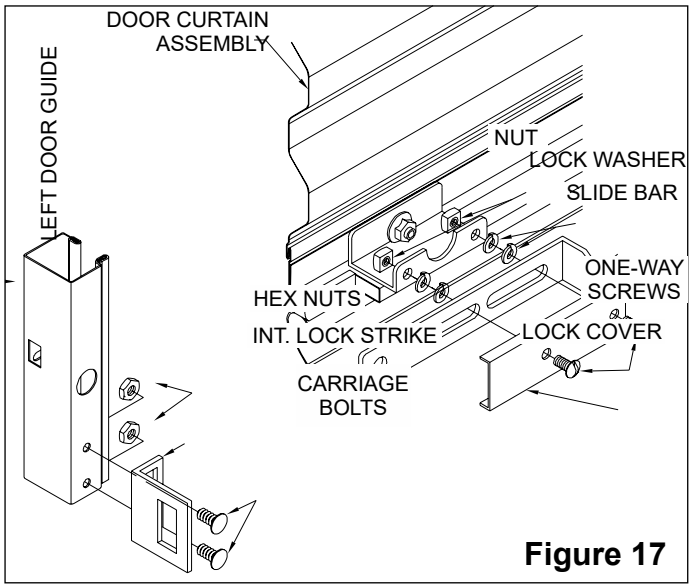

Figure 17

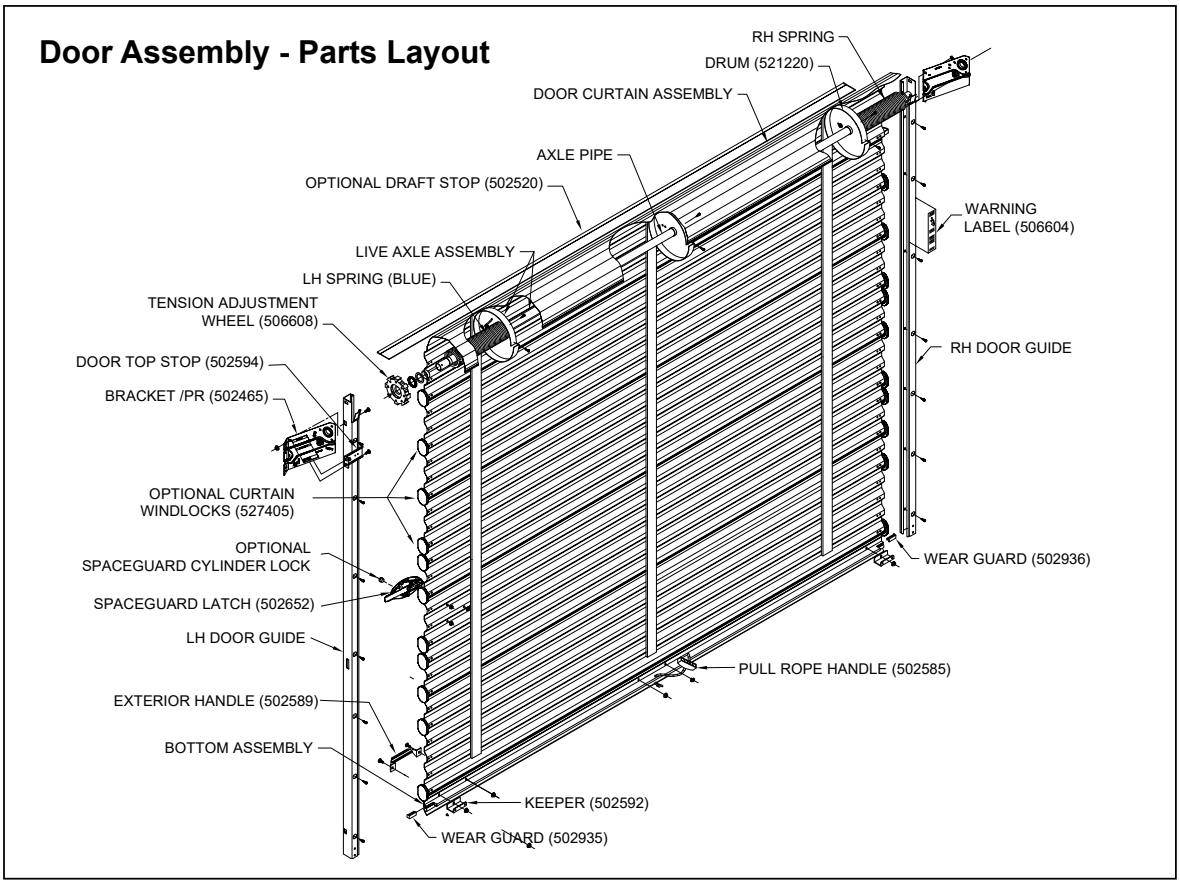

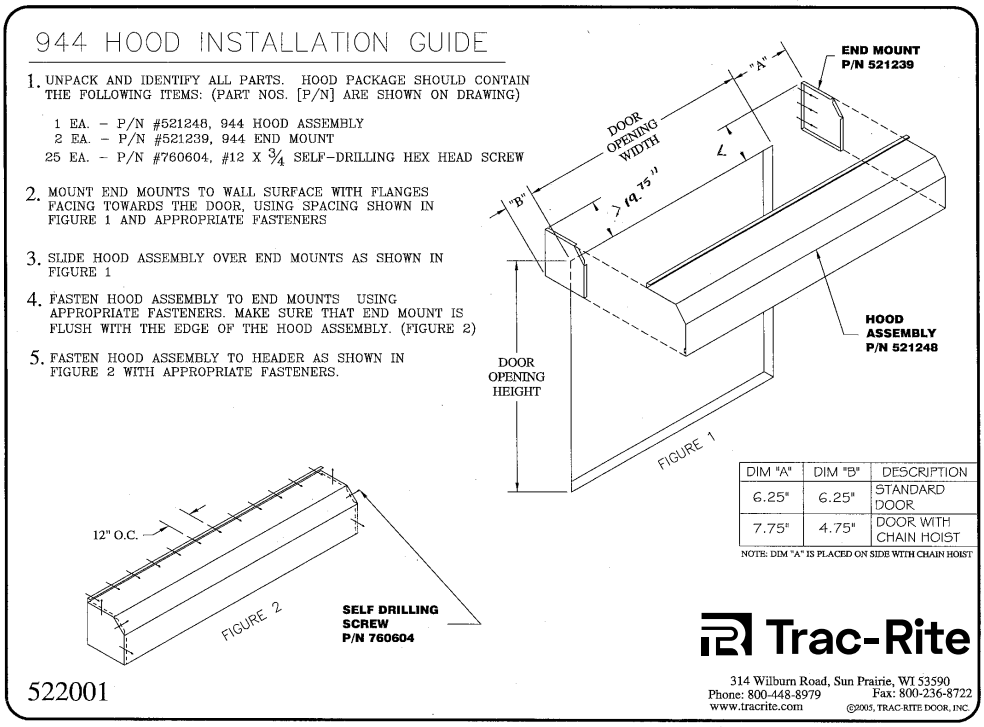

Proprietary Notice

Information contained in this document is copyrighted by Trac-Rite and may not be duplicated in full or part by any person without prior written approval of Trac-Rite. Its purpose is to provide the user with adequate detailed documentation to efficiently install a model 944 rolling curtain door.

TRACHTE

A TBS COMPANY

For more information on
Trachte self-storage systems,
please contact us:

608-837-7899
trachte.com

8000.MKT.0926